Measuring of Extra Low mm-Range Radiation for Medical Application

Yaroslav Savenko, Yuriy Zinkovskiy

National Technical University of Ukraine "Kiev Polytechnic Institute"

Yaroslav Savenko
9 Kurchatova Street, Flat 20, Kiev, 02166, Ukraine
Tel.: +38-044-519-2229
E-mail: savenko@rtf.ntu-kpi.kiev.ua

This paper reports results of the research work on development of techniques and devices for measuring of extra low radiation in mm-range. This radiation is widely used in medical therapy for a without drug correction of human physiological state. There are considered basic engineering aspects of mm-range therapy and diagnostics in the paper. It is also described an original measurer that helps researchers to get more clear understanding about physics and physiology, how low energy mm-range radiation interacts with human organism. Certain medical applications have been proposed for the measurer as for diagnostic device and as for calibrating device.

This paper should be considered as a current completed step in the research process of a role of extra low mm-range radiation on human being. At this step a previous medical experience had been analytically summarised in the field of mm-range therapy. This analysis made possible to accept an assumption how do mm-wave influence on human organism. It should be noticed that only extra low radiation was taking into account.

So we accepted initially that extra low radiation in mm-range are correcting a human physiological state by stimulating of individual human frequencies, which are participating in a mechanism of a self-regulation of the human organism. It had been also assumed this self-radiation just occupy a millimetre range of electromagnetic waves.

There was the main problem, that it was required to measure radiation at the noise level and even lower him. That is why the main task had been decided how these measurements must be provided. An original measurer was developed for investigations above mentioned.

Correction of human physiological state is carried out with non-invasive action of extra low mm-range radiation on receptor areas and acupuncture points. Individuals have certain frequencies of self-radiation. These frequencies must be used for enforcing of human organism reserves. Such condition requires the procedure for selection of individual stimulating frequencies in case of using of fixed radiator in mm-range. Using of impact avalanche transit time (IMPATT) diodes do not require this one, because an organism has self-selective possibilities. Thus it selects only same mm-waves as individual self-radiation. At that another wavelengths do not participate in biostimulation of organism. They have not negative action to neither normal nor diseased organism.

Spectral density of IMPATT diode amounts $1\cdot10^{-12}...1\cdot10^{-18}$ W/Hz at 4.8…5.7 mm wavelength range. Self-radiation of human organism amounts $1\cdot10^{-21}...1\cdot10^{-22}$ W/Hz. Measuring of this level of radiation requires the development of special techniques and devices. It has been proposed original device that scheme is shown on figure 1.

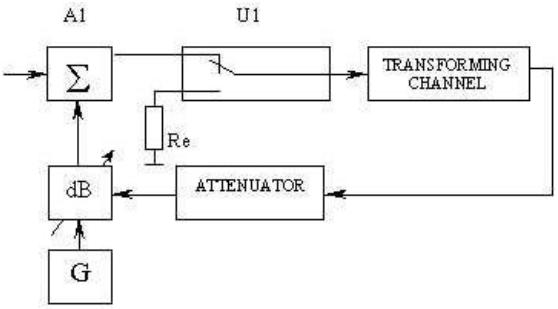

Fig. 1. Measurer of extra low mm-range radiation

The measurer helps researchers to get more clear understanding about physics and physiology, how low energy mm-range radiation interacts with human organism. In medical practice it could be used as diagnostic device itself and calibrating unit of therapeutic low energy mm-range device as well

In conclusion we must determine that getting of regulate statistic data of medical engineering investigations at different levels of complexity from a cell to a whole organism will be the next step in the way to make clear understanding about the role of low energy mm-range EMW in human life.