MICROWAVE INSTRUMENT FOR THE ROSETTA ORBITER (MIRO)

A.Deschamps[2], M..Allen[1], G. Beaudin[2] , N. Biver[2] , D. Bockelee-Morvan[2], J. Crovisier[2], D.Despois[3], P. Encrenaz[2], T. Encrenaz[2], M. Frerking[1], S. Gulkis[1], P. Hartogh[4], M. Hofstadter[1], W. Ip[5], M. Janssen[1], C. Jarchow[4], T.Koch[1], Jean-Michel Krieg[2], E. Lellouch[2], I. Mann[6], D. Muhleman[7], H. Rauer[8], P.Schloerb[9], T. Spilker[1], E.Steinmetz[4]

[1] Jet Propulsion Laboratory, California Institute of Technology, Pasadena, California
[2] Observatoire de Paris-Meudon , Paris, France ; [3]Observatoire de Bordeaux , Floirac, France
[4] Max Planck Institut fur Aeronomie , Lindau, Germany; [5]National Central University, Taiwan
[6] Universitaet, Wilhelm, Germany; [7]California Institute of Technology, Pasadena, California
[8] DLR, Berlin, Germany, [9] University of Massachusetts, Amherst, Massachusetts

1. Introduction :

The Microwave Instrument for the Rosetta Orbiter (MIRO) investigation addresses the nature of the cometary nucleus, outgassing from the nucleus and development of the coma as strongly interrelated aspects of cometary physics. During the flybys of the asteroids and, the MIRO instrument will measure the near surface temperature of these asteroids and search for outgassing activity in an effort to understand better the relationship between comets and asteroids.

MIRO is configured both as a continuum radiometer and a very high spectral resolution line receiver. Centre-band operating frequencies are near 190 GHz (1.6 mm) and 562 GHz (0.5 mm). Spatial resolution of the instrument operating in the submillimeter band is approximately 5 m at a distance of 2 km from the nucleus. The MIRO spectrometer is tuned to measure four volatile species - H_2O, CO, CH_3OH, and NH_3 and the isotopes of water —$H_2{}^{17}O$ and $H_2{}^{18}O$. These four species have all been measured to be present in comets. The spectral resolution is sufficient to observe individual, thermally broadened, line shapes at all temperatures down to 10 K or less. The MIRO experiment will use these species as probes of the physical conditions within the nucleus and coma. The basic quantities measured by MIRO are surface temperature, and gas abundance, velocity, and temperature of each species, along with their spatial and temporal variability. This information will be used to infer coma structure and outgassing processes, including the nature of the nucleus/coma interface.

MIRO will sense the subsurface temperature of the cometary nucleus to a depth of one centimetre or more using the continuum channels at millimetre and submillimeter wavelengths. Model studies will relate these measurements to electrical and thermal properties of the nucleus, and address issues connected to the sublimation of ices, ice and dust mantle thickness, and the formation of gas and dust jets. The global nature of these measurements will allow in situ lander data to be extrapolated globally, while the long duration of the mission will allow us to follow the time variability of surface temperatures and gas production. Models of the thermal emission from comets are very crude at this time because the available data does not strongly constrain the models; MIRO will offer the first opportunity to gather subsurface temperature data that can be used to constrain and test thermal models.

The MIRO investigation was conceived and designed functionally by the investigation team consisting of 19 scientists from 6 different institutions, and the MIRO project office, located at JPL.

Rosetta was launched by Ariane 5 from the ESA – CNES centre of Kourou (French Guyana) the 2nd of March 04 and the post launch commissioning of MIRO tests was successful.

2. MIRO characteristics.

The MIRO key points characteristics are summarized in following Tab 1.

Table 1 MIRO key points characteristics

Telescope		
Diameter	30 cm	30 cm
Beam size	22 arcmin	7 arcmin
Footprint (2 km nadir distance)	15 m	5 m
Spectral characteristics		
Frequency	188.5 – 191.5 GHz	547.5 – 580.5 GHz
IF bandwidth	1 – 1.5 GHz	5.5 – 16.5 GHz
Spectral resolution		44 kHz
Individual spectral bandwidth		20 MHz
Spectral bandwidth		180 MHz
Number of channels		4096
Radiometric characteristics		
DSB noise temperature	1000 K	5000 K
rms spectroscopic characteristics (300 KHZ, 2 mn)		2 K
rms continuous sensitivity (1 s)	< 1 K	< 1 K
Data collection rate	0.23 – 2.53 kbit/s	0.23 – 2.53 kbit/s

3. Hardware description

MIRO consists of an assembly of two heterodyne radiometers:

- Millimetre wave receiver (at 190 GHz , ~ 1.6 mm)
- Submillimetre wave receiver (at 562 GHz, 0.5 mm)

The mm and sub-mm radiometers are configured with a broadband continuum detector for the determination of the brightened temperature of the comet nucleus and the target asteroids. The sub-mm receiver is configured as a very high resolution spectrometer for the observation of the eight molecular transitions.The instrument is constituted of four separate physical modules, interconnected by a harness. The sensor unit is mounted on the spacecraft payload plane using the baseplate as the interface. The telescope boresight direction is aligned with the ROSETTA payload line of sight. The optical bench is mounted on the undersite of the baseplate, under the telescope and inside the spacecraft. The mm and sub-mm wave receiver front ends, the calibration mechanism and the quasi-optics for coupling the telescope to the receivers are installed on the optical bench. The Sensor Backend Electronic Unit contains the intermediate frequency processor, the PLL and the frequency sources. Due to his power consumption, it mounted next to a louvred radiator internal to the spacecraft. The Electronic Unit contains the Chirp Transform Spectrometer (CTS), including instrument computer and power conditioning circuits. The Ultra Stable Oscillator is self contained and thermally controlled.Those items are presented in Fig 1.

Fig 1 : MIRO block diagram

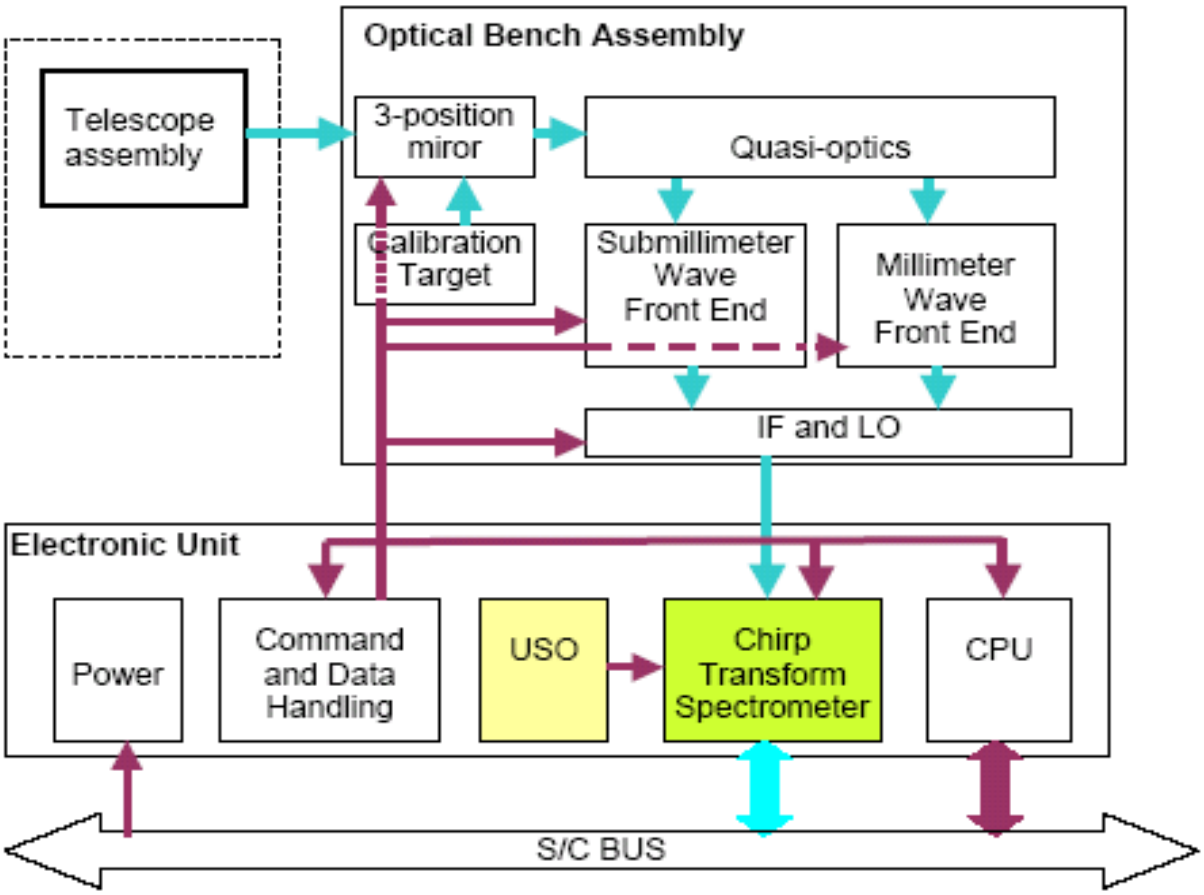

4. MIRO post launch results

The ROSETA spacecraft, with MIRO on –board, was successfully launched from Kourou (French Guyana) on March 2nd 2004, in an Ariane V-G+.

4.1 - In flight key parameters

Key parameters were measured using the earth as target, they are summarised in this table.

Parameter	As designed	As measured in-Orbit
mm beam width	25 arcmin	23.8±1.2 arcmin
smm beam width	10 arcmin	7.5 ± 0.25 arcmin
Sensitivity(mm continuum)	1 K in 1 sec	.1 K in 1 sec
Sensitivity (smm continuum)	1 K in 1 sec	.3 K in 1 sec
Sensitivity (smm spectroscopic)	2 K in 2 min (300 KHz (dsb)	< 1 K in 2 min (300 KHz dsb)
Spectral Resolution	50 kHz (.027km/s)	To be measured

4.2 - MIRO first light

On 24 April 2004, an area of approximately 1 square degree centered on the nominal Earth position was mapped to obtain a boresight for the MIRO receivers.

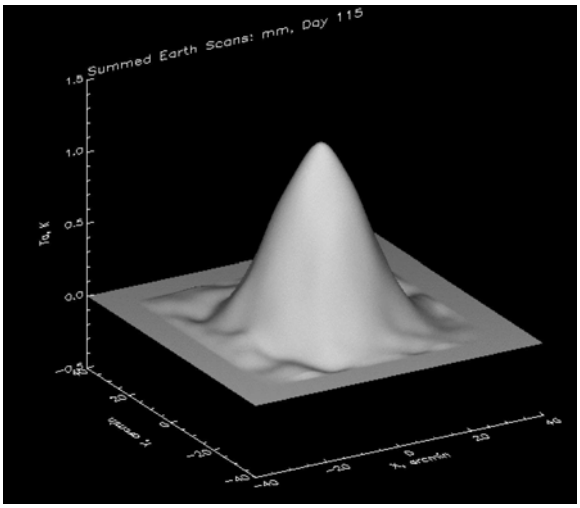

Fig 7: Millimeter receiver boresight:
Frequency (mean) = 190 GHz
Earth Distance = 22.5 x 10^6 km
Earth Diameter = 2 arcmin
MIRO Beam width = 22.5 arcmin
Boresight Position:
X = -1.1 +– 1.5 arcmin
Y = -3.4 +– 1.5 arcmin

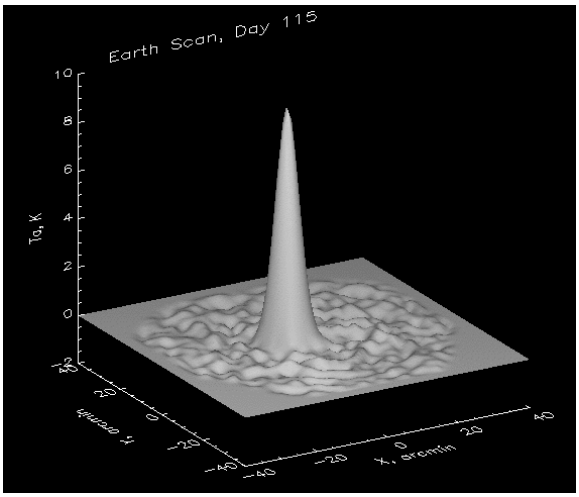

Fig 8: Sub-millimeter receiver boresight
Frequency (mean) = 562 GHz
Earth Distance = 22.5 x 10^6 km
Earth Diameter = 2 arcmin
MIRO Beam width = 7.2 arcmin
Boresight:
X = -4.9 +- 0.3 arcmin
Y = -0.4 +- 0.3 arcmin

5. Conclusion

The MIRO instrument appears to be fully functional at the end of Commissioning. The measured key parameters appear to be better than expected.
The cruise continues till the comet rendezvous, expected on July 2014.

Principal technical publications :

- Gulkis S. Allen M. Beaudin G. Biver N. Bockelee-Morvan D.Crovisier J. Despois D. Encrenaz P. Encrenaz T. Frerking M. Hartogh P. Hofstadter M. Ip W. Janssen M. Lellouch E.

Microwave Instrument for the Rosetta Orbiter (MIRO)

Oral presentation at workshop "The New Rosetta Targets", 13-15 October 2003, Capri, Italy

- Encrenaz T.; Coradini A.; Beaudin G.; Crovisier J.; Drossart P.; Erard S.; Germain B.; Gulkis S.; Langevin Y.; Lellouch E.;

The Mars flyby of ROSETTA : An opportunity for infrared and microwave high-resolution sounding

Planet.Space Sci.

- Beaudin G.; Gulkis S.; Frerking M.; Hartogh P.et coll.

MIRO, a microwave radiometer/specrometer for the ROSETTA orbiter and a CTS spectrometer with an ASIC approach

COST Action 712; Report on Project 4 Workshop; Berne; Suisse; 9-10 décembre 1999

- Beaudin G.; Gulkis S.; Frerking M.; Hartog P.; Allen M.; Bockelee-Morvan D.; Crovisier J.; Despois D.; Encrenaz P.; Encrenaz T.; Germain B.; Hofstadter M.; Ip W.; Janssen M.; Lellouch E.; Mann I.; Muhleman D.; Rauer H.; Schloerb F.P.;

A microwave radiometer/spectrometer for the Rosetta orbiter

Proc.2nd ESA Workshop on Millimeter Wave Technology and Applications : Antennas; Circuits ans Systems; MilliLab; Espoo; Finlande; 27-29 mai 1998