Characteristic Features of 40 kHz LF Signal Amplitude

Barin Kumar De, S.K Sarkar and Pinaki Pal
Tripura University, Suryamaninagar 799130, Tripura (W), INDIA
E-mail: barin_de@yahoo.com

ABSTRACT:

The wave-guide formed between the lower ionosphere and the earth's surface is good for very low frequency (VLF) and low frequency (LF) propagation round the earth. The conductivity parameter determining the status of the ionospheric radio propagation is controlled by solar conditions. The conductivity is affected due to extra-ionization in the ionosphere during enhancement of solar flare effect. This, in turn, causes a variation in attenuation factor. The variation of attenuation causes variation of amplitude of the LF 40-kHz signal (call sign: JG2AS) modulated by 1Hz, transmitted from Sanwa, Japan ($36^0 11^/$ N, $139^0 51^/$E) continuously. The signal received at Agartala (23^0N, 91^0E) exhibits the sunrise and sunset effects. The sunrise fades follow the sunrise time over the propagation path. The fade time varies from month to month. The signal level is observed to be higher during winter, but day to night variation is small in this season. Signal level is observed to be lowest during June to August.

INTRODUCTION:

The spectrum of electromagnetic radiation below 100 kHz offers many interesting monitoring possibilities due to its unique characteristics. Here propagation is unusual because frequencies below 100 kHz have an additional characteristic of being able to travel long distance guided between earth and ionosphere. The wave guide formed between the lower ionosphere and earth's surface is good for very low frequency (LF) propagation round the earth. The conductivity parameter determining the status of the ionospheric radio propagation is controlled by the solar conditions. It is well established that low frequency (LF) signals propagated over long distance exhibit diurnal variations due to temporal variation of electron density of lower ionosphere. Remarkable features are the so-called sunrise and sunset effects [1, 2].

For LF propagation in earth-ionosphere wave guide, the nature of ground reflector can be treated to be invariant. The characteristic variation of D-region must appear as signature in LF amplitude. The attenuation factor for the wave guide mode propagation of low frequency wave is given by [3]

$$\alpha_M = -8.68 \times (2\pi/\lambda) \times Im(S_M) \quad \text{(in dB km}^{-1}\text{)},$$

where $S_M = (1-C_M^2)^{1/2}$, C_M being the roots of modal equation given by

$$R_i \exp(ik_0 H C_M) = \exp(-i2\pi M)$$

Here H is the height of the upper boundary of the wave guide. The Fresnel's reflection coefficient R_i of the lower boundary of the ionosphere is dependent on conductivity parameter (ω_r).

Studies of the VLF and LF propagation at different spot frequencies have been made from time to time by many authors but excluding the frequency range from 30 to 60 kHz for reasons not clearly understood. The main exception here is the work of Crouchly and Rahmani [1] on the N-S propagation of 40 kHz signal over a long distance (7100 km) from Japan to Australia. Crombie in the year 1958[4] reported the asymmetry in the east-west and west-east propagation near 20 kHz but without mentioning meteorological effect. During night the attenuation rate of the signal received from the west was reported to be less than that of the signal received from the east and remarked that this asymmetry would decrease with increasing frequency having no asymmetry above about 20 kHz. Different attenuation of the signal due to long distant propagation over sea and land has been reported earlier but the effect of climate has never been attempted. We are in a previleged position at Agartala as regards as the propagation of the 40 kHz signal from Japan is concerned since both stations as well as the intervening propagational regions undergo similar seasonal variations of weather in course of a year. This prompted us to take up the problem and in this paper we communicate the experimental results of the seasonal variations 40 kHz signal in an approximately E-W direction over a long path of 4884 km. Since both the transmitting station Sanwa, and the receiving station, Agartala are in the northern hemisphere and at positions of small latitude difference, the possible seasonal variation of the signal amplitude can be investigated with reasonable accuracy.

EXPERIMENT:

The receiving system consists of loop antenna feeding a number of OP AMPs used in tuned radio frequency mode [Fig 1].The output of AC amplifier is detected with a time constant 0.22s and the DC level is further amplified quasi-logarithmically. A DC amplifier has been used to adjust the receiver's sensitivity corresponding to the incoming signal which shows marked variation over the year. The DC output is used as the signature of amplitude of 40 kHz. The circuit diagram of the receiving system is shown in the Fig. 2. Followings are the specifications of Transmitter & receiver.

Transmitter: Call Sign: JG2AS/JJF-2, Frequency = 40 kHz and continuous, Radiating power = 10 kW;

***Receiver*:** Tuned frequency type, Response frequency = 40 kHz, Bandwidth = 200Hz, Maximum gain = 120 dB, Dynamic range = 40 dB.

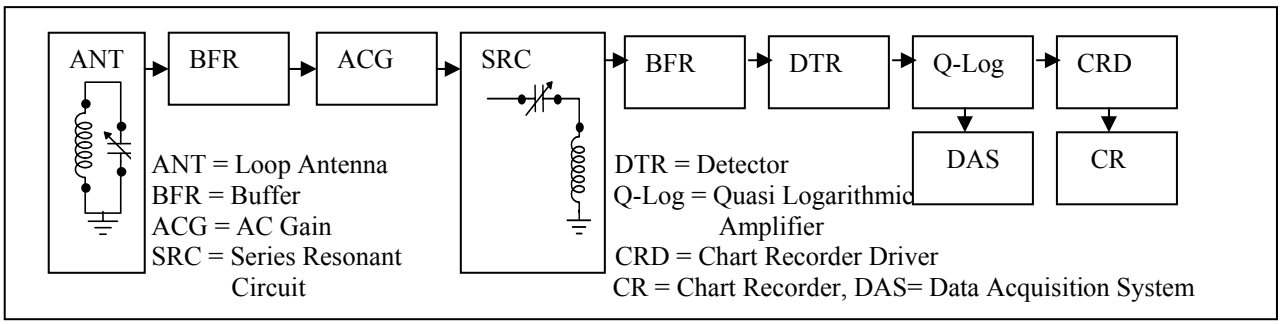

Fig. 1. Block diagram of 40-kHz receiver

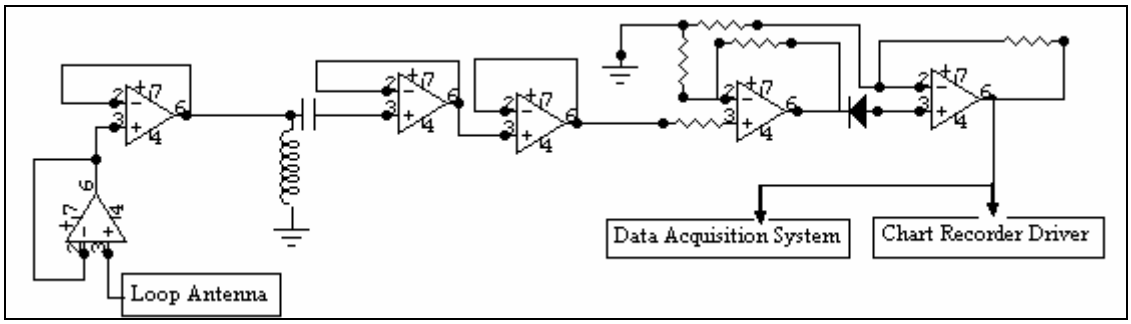

Fig.2. Circuit Diagram of the receiver

OBSERVATIONS AND RESULTS:

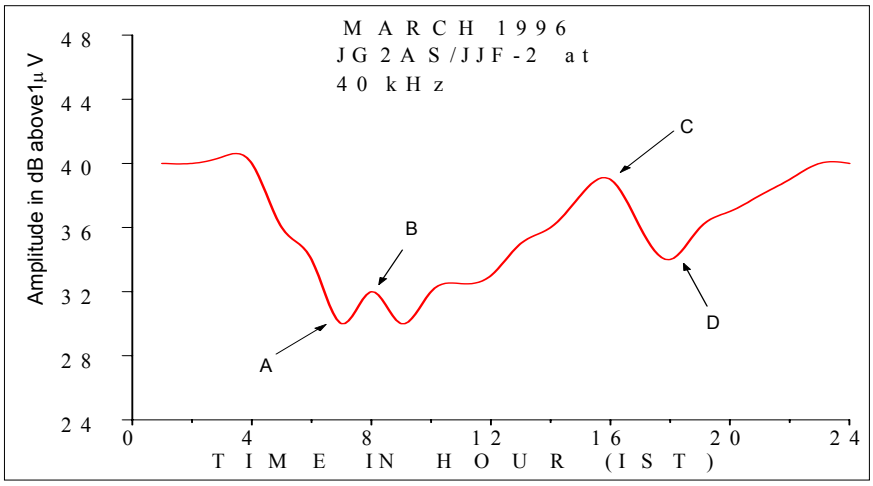

Fig.3. Diurnal variation of the 40 kHz signal

Sunrise and sunset effects characterize the amplitude of 40 kHz radio in the absence of any disturbance. It is seen from diurnal pattern that the level is higher at night than at day. This diurnal pattern is highly affected by principal geomagnetic storms. Fig. 3 shows the diurnal variation of 40 kHz signal averaged over locally clear days of March 1996. The sunrise minimum (A), recovery effect (B), afternoon maximum (C) and sunset minimum (D) have been indicated by arrow marks.

The field strength of the 40 kHz signal has been measured round the clock for a period from November 1995 to May 1998, except the periods of local power failure. In fact, the sunrise fade, for the propagation path concerned, is appreciable from March to September. In all the months, there is a time lag between the sunrise at the third ionospheric reflection zone and the fade minimum, the later varies from month to month. After the occurrence of sunrise fade the signal amplitude rises gradually and attains the largest value in the local evening and the post evening hours. The sunset fade is not very prominent. Fig. 4. shows the monthly values of the median field strength at 00-00, 04-00, 08-00, 12-00, 16-00, and 20-00 hr IST. All the graphs shows that signal level is highest in the winter months like December, January and February. Lowest levels are obtained during monsoon months.

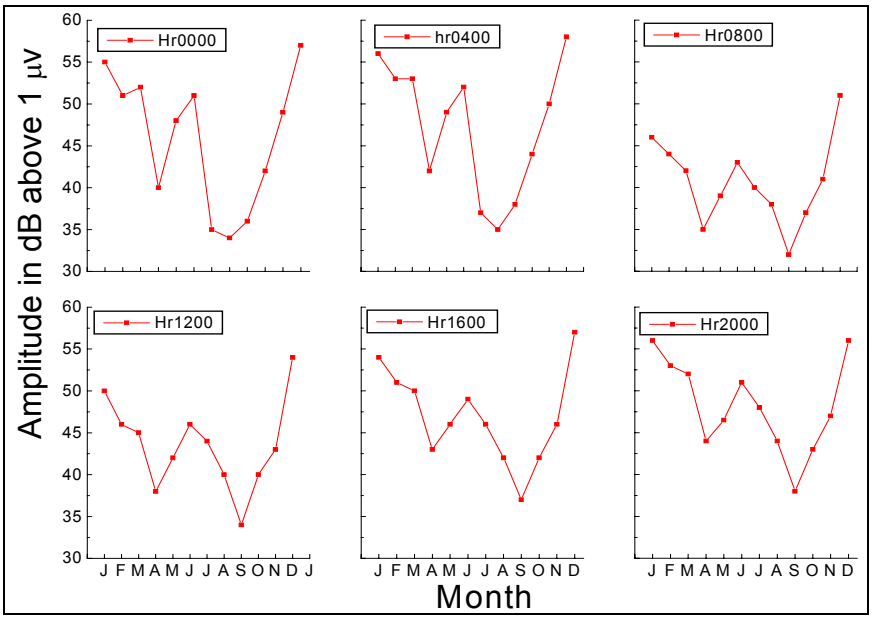

Fig.4. Monthly values of the median field strength at different local hours

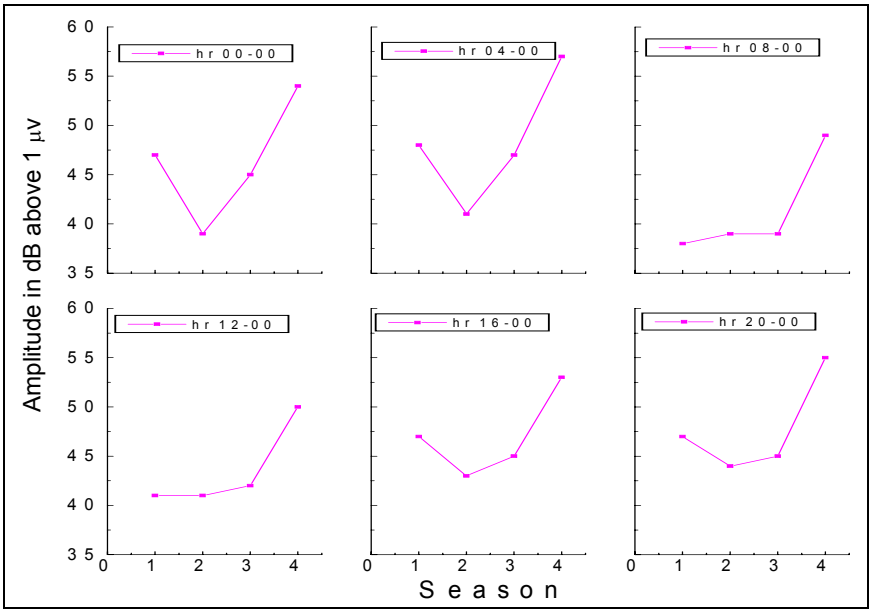

Fig.5. Variation of signal level with season. (1=Pre-monsoon, 2=Monsoon, 3=Post monsoon, 4=Winter)

In Fig.5. variation of signal level with seasons is plotted. In all the hours the level in monsoon is lowest. The midnight levels in pre-monsoon and post monsoon are same whereas it is very high in winter. This is also true for level at dawn hour (04-00). The levels at 08-00 hour and 12-00 hour are almost same during pre-monsoon, monsoon and post monsoon. The level is comparatively high in winter. The levels in 16-00 hr and 20-00 hr are higher in post monsoon and pre-monsoon than monsoon. The winter level is as usual high of all.

DISCUSSION:

Long distant LF propagation is affected by the changes of the ionosphere. Usually the amplitude of the signal is greater at night, but along certain paths the amplitude is found regularly to decrease rather than increase at night and the field amplitude is along many paths is found to be larger in summer than that winter[5]. All these effects depend on the transmitter to receiver distance, the amount of sunlit path along the radio trajectory, the height of the ionospheic reflection zone and finally on the seasonal structure of the ionosphere. Ionospheric probing using ground based facilities and frequencies in the region from ELF to LF involves the measurement of one or more parameters of the radio signal such as amplitude, phase and polarization as received at locations near to or far away from the radiation source. Such measurements in the past have been widely used to observe or detect changes in the normal and disturbed ionization conditions due to solar flares, meteor showers, and earth quakes up to and below E region [7, 8, and 9]. The 40 kHz signal analyzed here shows a diurnal variation depending on the ionospheric condition, while the seasonal variation appears to be closely associated with the temperature and the humidity of the propagational path. The sunrise effect is explained by the gradual appearance of the electrons below the E region due to photo-dissociation which in turn produces absorption of LF and thus the signal amplitude decreases. It also causes a gradual lowering of the reflecting height from 90 to 70 km. The greater field amplitude in winter over the amplitudes at other seasons is due to the larger value of index of reflection of the ionosphere in winter than in summer [5].

ACKNOWLEDGEMENT:

The authors are thankful to Professor S. K. Sarkar, Department of Physics, Calcutta University for his constant encouragement in this work. The authors are also thankful to the authority of Tripura University for providing necessary infrastructure for carrying out this experiment.

REFERENCES:

[1] J. Courchley and Z. Rahmani , “Phase and amplitude variations of 40 kHz radio waves propagating over a 7.1 Mm path”, *J. atmos. terrest phys*., **35** , 479-495,1973.
[2] S. K. Sarkar and B. K. De, “Meteorological effect on long distant 40 kHz signal,” *Arch. Met. Geoph. Biocl.,* **33A**, 365-379,1985.
[3] J.R.Wait, *Electromagnetic Waves in Stratified Media,* Pergamon Press, Oxford, 1982.
[4] D.D.Crombie, “Differences Between the East-West and the West-East Propagation of VLF signals over Long distances”, *J. atmos. terrest phys*., **2**, 110-117, 1958.
[5] Al Pert, Ya.L, “*Radio wave propagation and ionosphere*”, **2**, 2nd ed. New York & London, Consultants Bureau 1974.
[6] C.M.Crain, “Ionospheric probing with long wavelength radio waves”, *J. atmos. terrest phys*., **32**, 551-566, 1970
[7] M. Yamashita, “The conductivity of the lower ionosphere deduced from sudden enhancements of strength (SES) of VLF transmission”, *J. atmos. terrest phys*., **31**, 1049-1057, 1969.
[8] J.V.M.Naidu,B.R.Rao, “Effect of Geminid Meteor Showers on Nocturnal LF Amplitude”. *J. Geophys. Res*. **81**, 3435-3436, 1976.
[9] B.K.De and S.K.Sarkar, “Fluctuations in low frequency Signal strength Accompanying Seismic Waves”. *Ann. Geophys*. **2**, 505, 1984.