A SIGE LOW PHASE NOISE PUSH-PUSH VCO FOR 72 GHZ

Robert Wanner[1], Herbert Schaefer[2], Rudolf Lachner[2], Gerhard R. Olbrich[1] and Peter Russer[1]

(1) Lehrstuhl für Hochfrequenztechnik, Technische Universitaet Muenchen, Arcisstr, 21, 80333 Muenchen, Germany

(2) Infineon Technologies AG, 81739 Muenchen, Germany

Email: wanner@ tum.de, Phone: +49-89-289-23367, Fax: +49-89-289-23365

ABSTRACT

This paper describes a monolithically integrated push-push oscillator fabricated in a production-near SiGe:C bipolar technology. The transistors used in this work show a maximum transit frequency $f_T = 200\,\text{GHz}$ and a maximum frequency of oscillation $f_{max} = 275\,\text{GHz}$. For the passive circuitry transmission-line components, integrated spiral inductors and MIM-capacitors are used. The oscillator output frequency can be tuned from 67.8 GHz to 74.6 GHz. In this frequency range the output power varies between $-2.6\,\text{dBm}$ and $-0.6\,\text{dBm}$ while the measured single sideband phase noise is less than $-103\,\text{dBc/Hz}$ at 1 MHz offset frequency.

INTRODUCTION

The availability of suitable signal sources is a precondition for the application of SiGe technology in millimeter wave systems [1]. In recent years great advances in SiGe hetero bipolar transistor technology have been made [4]. Due to the significant lower costs, compared to III/V based technologies, SiGe integrated circuits can open up mass markets for millimeter wave systems. Enhanced circuit concepts as the push-push topology allow to reach a maximum in performance for a given technology.

CIRCUIT CONCEPT

In this work we make use of the push-push oscillator principle. In this case two subcircuits oscillate in odd mode at the fundamental frequency f_0 and the first harmonic at $f_1 = 2f_0$ is coupled to the output port [2, 3]. The generated signals of the two suboscillators are given by

$$s_1(t) = \sum_{n=0}^{\infty} a_n \cdot \sin(\omega_n t + \varphi_n) \tag{1}$$

$$s_2(t) = \sum_{n=0}^{\infty} a_n \cdot \sin(\omega_n t + \varphi_n + (n+1)\pi). \tag{2}$$

The spectral components have the same amplitudes a_n and differ only in phase by $(n+1)\cdot\pi$, while n is the harmonic index. The output signal is the sum of the two suboscillator signals

$$s(t) = \sum_{n=1,3,\ldots}^{\infty} 2 \cdot a_n \cdot \sin(\omega_n t + \varphi_n). \tag{3}$$

Due to the phase differences of the fundamental frequency and the even harmonics, these frequency contributions cancel out, while the odd harmonics add in phase. Hence, in a proper operating push-push oscillator power is delivered to the load only at the odd harmonics $f_1, f_3, \ldots$ Efficient operation of the circuit is obtained, when both suboscillators operate at the same idling frequency f_0 and stable odd mode operation is ensured.

As the two suboscillators oscillate at halve of the output frequency, higher resonator Q-factors are available. Furthermore, in a push-push oscillator the fundamental frequency signal is terminated by a 'virtual ground'. Thus, the loaded Q-factor

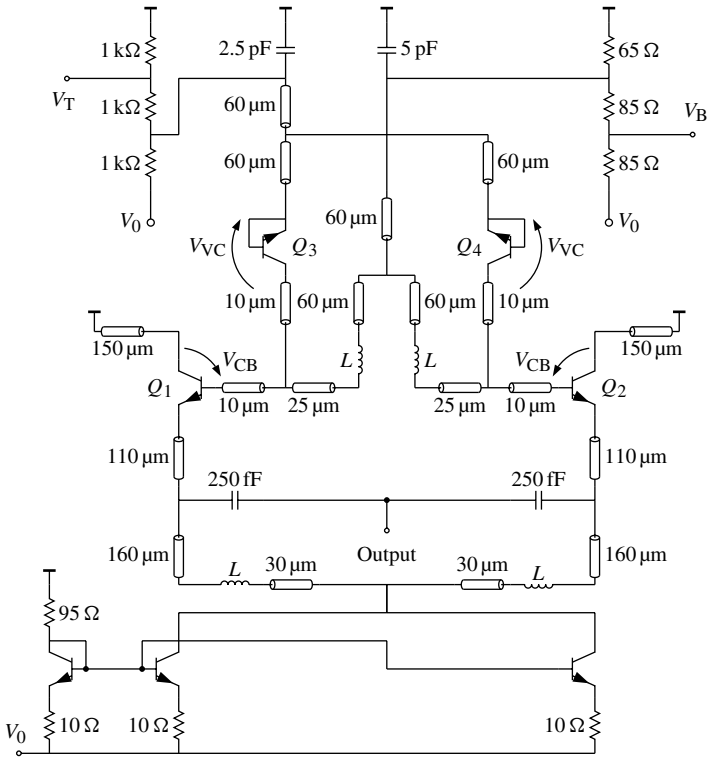

Figure 1: Circuit diagram of the 72 GHz push-push VCO

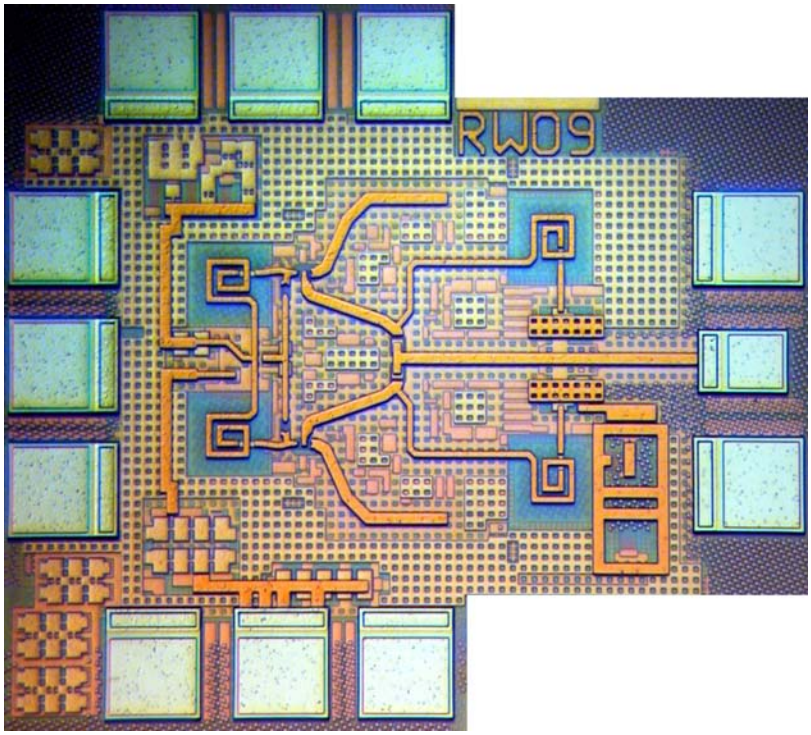

Figure 2: Chip photography of the realized push-push oscillator (680 µm × 550 µm).

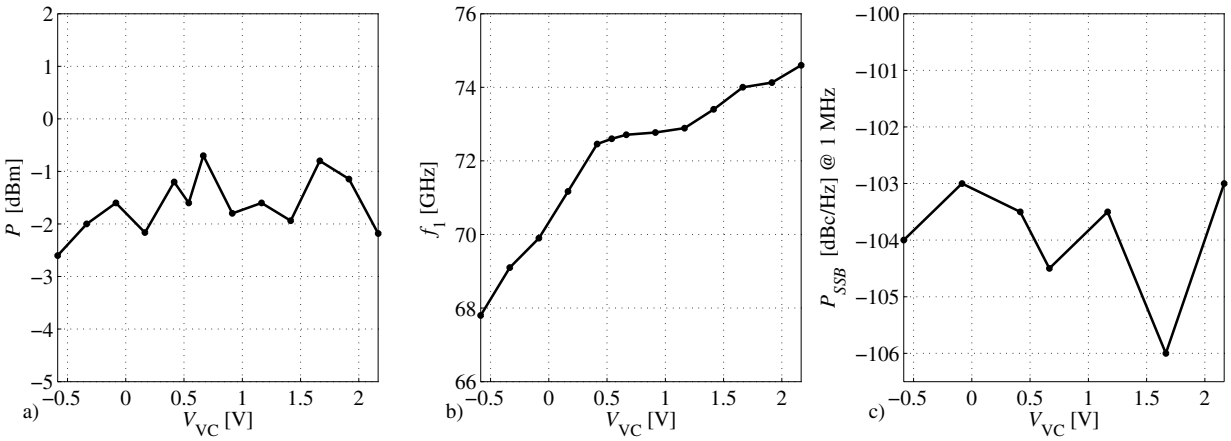

Figure 3: Measured output power P (a), output frequency f_1 (b) and single side band phase noise P_{SSB} at 1 MHz offset from the carrier (c) as a function of the varactor voltage V_{VC} ($V_0 = -1.75\,\mathrm{V}$ and $V_{\mathrm{B}} = -1.12\,\mathrm{V}$)

is equal to the unloaded Q-factor of the oscillator. Additionally push-push oscillators are highly resistant to load pulling effects, because the suboscillators are terminated by a 'virtual ground' and only the first harmonic frequency component is influenced by the oscillators load impedance.

The push-push oscillator principle allows to extend the usable frequency range of an active device for the realization of stable signal sources [5]. Compared to solutions using frequency doublers, a push-push oscillator is generally less space consuming and offers a lower phase noise level [6].

Designing the push-push oscillator we first consider only one single suboscillator that is virtually grounded at its output terminal. To fulfill the oscillation criterion a short transmission line is connected to the collector terminal, an integrated spiral inductor is connected to the base terminal and a MIM-capacitor is connected to the emitter terminal. In parallel to the inductor at the base terminal a varactor is placed in order to allow a tuning of the oscillation frequency. For this purpose we employ the capacitance of a base-collector junction as a tuning varactor.

By connecting the two emitter networks the common output terminal is realized. Thus the phase locking and the superposition of the output signals with counterphase fundamental waves is performed. For the bias decoupling at the emitter network a combination of a spiral inductor and a transmission line is applied. Here, a constant emitter bias current is impressed by a current mirror. The DC supply at the base terminal is accomplished by a resistive divider. An additional tuning pad V_{B} allows to vary the collector to base voltages V_{CB} of the transistors Q_1 and Q_2. The collector terminals are connected to ground via transmission line resonators. The circuit diagram of the whole oscillator with the bias network is presented in Fig. 1.

EXPERIMENTAL RESULTS

The push-push oscillator has been fabricated in a production-near SiGe:C bipolar technology of INFINEON TECHNOLOGIES [4]. The transistors make use of a double-polysilicon self-aligned emitter-base configuration. The effective minimum emitter width is 0.14 µm. The maximum transit frequency f_{T} is 200 GHz and the maximum frequency of oscillation f_{max} is 275 GHz. The process additionally offers a four-layer copper metallization, two types of polysilicon resistors, TaN resistors, and MIM-capacitors. A chip photograph of the fabricated circuit is depicted in Fig. 2.

The output signal of the push-push oscillator is measured on wafer using an HP 71000 spectrum analyzer and appropriate harmonic mixers. The measured power levels are corrected for the conversation losses of the mixers. The losses of the RF-probe and the measurement cables are taken into account by 1 dB.

Fig. 3 demonstrates the performance of the oscillator as a function of the varactor voltage V_{VC}. The measured oscillator output frequency can be tuned from 67.8 GHz to 74.6 GHz. This gives a relative tuning bandwidth of 10 %. In this frequency range the output power is -1.6 ± 1 dBm. By adding an integrated buffer amplifier the output power of the

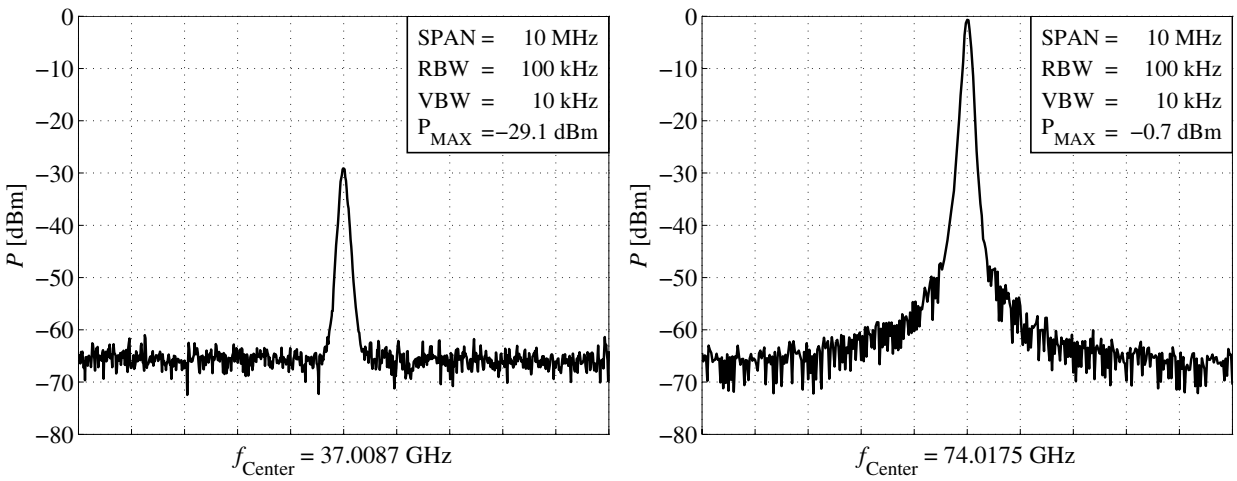

Figure 4: Measured spectra of the output signal for the fundamental frequency f_0 (left) and the first harmonic f_1 (right)

circuit presented here may be increased. The measured single sideband phase noise level at 1 MHz offset frequency is less than $-103\,\mathrm{dBc/Hz}$. To our knowledge this phase noise level is the lowest one reported in literature so far for integrated VCOs in this frequency range.

Fig. 4 shows the spectra of the output signal for the fundamental frequency f_0 and the first harmonic f_1. The output power of the signal at the fundamental frequency f_0 is below $-28\,\mathrm{dBm}$ in the whole tuning range. This indicates a high symmetry of the fabricated push-push oscillator and a proper odd mode operation. The power consumption of the whole device is about 57 mW. The circuit has not yet been optimized for minimum power consumption.

CONCLUSION

A push-push oscillator with a tunable output frequency form 67.8 GHz to 74.6 GHz has been presented. This result complies with a relative tuning bandwidth of 10 %. The maximum output power is $-0.6\,\mathrm{dBm}$ and the single side band phase noise is below $-103\,\mathrm{dBc/Hz}$ at an offset frequency of 1 MHz.

References

[1] P. Russer, “Si and SiGe Millimeter-Wave Integrated Circuits,” *IEEE Transactions on Microwave Theory and Techniques*, vol. 46, pp. 590–603, May 1998.

[2] J. R. Bender and C. Wong, “Push-Push Design Extends Bipolar Frequency Range,” *Microwaves & RF*, pp. 91–98, Oct. 1983.

[3] Anthony M. Pavio and Mark A. Smith, “A 20-40-GHz Push-Push Dielectric Resonator Oscillator,” *IEEE Transactions on Microwave Theory and Techniques*, vol. 33, pp. 1346–1349, Dec. 1985.

[4] J. Böck, H. Schäfer, K. Aufinger, R. Stengl, S. Boguth, M. Schreiter, R. Rest, H. Knapp, M. Wurzer, W. Perndl, T. Böttner, and T. F. Meister, “SiGe Bipolar Technology for Automotive Radar Applications,” in *IEEE Bipolar / BiCMOS Circuits and Technology Meeting, Sep. 13-14, Montreal*, pp. 84–87, 2004.

[5] F. X. Sinnesbichler and B. Hautz and G. R. Olbrich, “A Si/SiGe HBT dielectric resonator push-push oscillator at 58 GHz,” *IEEE Microwave and Guided Wave Letters*, vol. 10, pp. 145–147, April 2000.

[6] A.-S. Hyun, H.-S. Kim, J.-Y. Park, J.-H. Kim, J.-C. Lee, N.-Y. Kim, B.-K. Kim, and U.-S. Hong, “K-band hair-pin resonator oscillators,” *IEEE MTT-S International Microwave Symposium Digest*, vol. 2, pp. 725–728, 1999.