SINUSOIDAL OSCILLATOR – A NEW CONFIGURATION BASED ON CURRENT CONVEYOR

NEETA PANDEY[1], SAJAL K. PAUL[2] and ASOK BHATTACHARYYA[3]

([1]Department of Electronics and Communications, Bharati Vidyapeeth's College of Engineering,A-4, Paschim Vihar, N. Delhi -110063.Email:n66pandey@rediffmail.com

[2]Department of Electronics and Instrumentation, Indian School of Mines, Dhanbad - 826004, Jharkhand, India. Email: sajalkpaul@rediffmail.com

[3] Department of Electronics and Communications, Delhi College of Engineering, Bawana Road, Delhi – 110042. Email: bh_asok@hotmail.com)

Abstract

A new sinusoidal oscillator configuration using two second generation current conveyors (CCIIs) is introduced which requires only two grounded capacitors and two resistors. The proposed structure enjoys independent frequency control through grounded resistor. The circuit is extended to electronic tunability regime by replacing CCIIs with second generation current controlled conveyors (CCCIIs). The frequency of oscillation of the later structure is electronically controllable by bias current of CCCIIs. The simulation results are illustrated to verify theory.

Introduction

Current conveyor (CCII) has attracted the attention of researchers in the field of active filters and oscillators due to its distinct advantages over operational amplifier. This is attributed to their larger signal bandwidth, greater linearity, wider dynamic range, simple circuitry and low power dissipation [1]. Recently a number of schemes have been proposed in the literature [2-7] to realize current conveyor based oscillators using two current conveyors, two capacitors and two or three resistors. By using recently introduced second generation current controlled conveyor (CCCII) [8], the applications of current conveyor have been extended to the domain of electronically adjustable functions. Electronic adjustability of CCCII is attributed to the dependence of resistance at port x on the bias current. Hence in the recent past, there has been great emphasis on the design of oscillator circuits using CCCII [9 – 11].

The purpose of this paper is to propose a new sinusoidal oscillator structure employing two CCIIs, two resistors and grounded capacitors each. Further the structure with CCIIs has a series resistance at port x which makes the circuit an ideal candidate to be extended in electronic tunability regime by replacing each CCII and series resistance at port x by

CCCII. The resulting structure offers electronic tunability of frequency of oscillation apart from using only two grounded capacitors and no resistor.

Proposed Oscillator Configuration

The proposed oscillator realization is shown in Fig. 1 where CCII± elements are considered ideal having terminal properties

$$v_x = v_y, \quad i_{z\pm} = \pm i_x \quad \text{and} \quad i_y = 0$$

The conveyor will include a positive sign if $i_z = i_x$ and a negative sign if $i_z = -i_x$.

The routine analysis of circuit yields the characteristic equation as

$$s^2 C_1 C_2 R_1 R_2 + (C_2 - C_1) s R_1 + 1 = 0$$

The oscillation condition and oscillation frequency are given respectively by

$C_2 = C_1$ and $\omega_0 = (1/R_1 R_2 C_1 C_2)^{1/2}$.

The R_1 and R_2 appear only in the expression for the oscillation frequency. Hence frequency of oscillation can be adjusted independently, particularly using grounded resistance R_1 without affecting the condition of oscillation.

The properties of CCCII± are similar to CCII± except that it has finite input resistance R_x at terminal x which can be controlled by bias current I_0. So voltage relationship between port x and port y modifies to

$$v_x = v_y + i_x R_{xi}(I_{0i}), \quad \text{where } R_{xi} = V_T / 2I_{0i}$$

The V_T and I_{0i} are thermal voltage and bias current respectively and i = 1, 2. The proposed oscillator structure based on translinear conveyor is shown in Fig. 2 which uses one CCCII- and one CCCII+ and two grounded capacitors. The characteristic equation is

$$s^2 C_1 C_2 R_{x1} R_{x2} + (C_2 - C_1) s R_{x1} + 1 = 0$$

Substitution of R_{xi} yields

$$s^2 C_1 C_2 V_T^2 + 2(C_2 - C_1) s I_{02} + 4 I_{01} I_{02} = 0$$

The oscillation condition and oscillation frequency are given respectively by

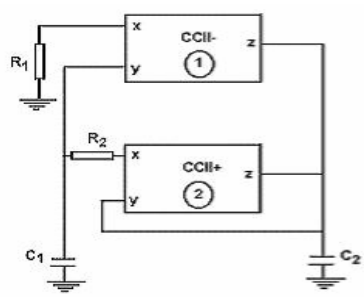

Fig. 1. Proposed CCII based oscillator

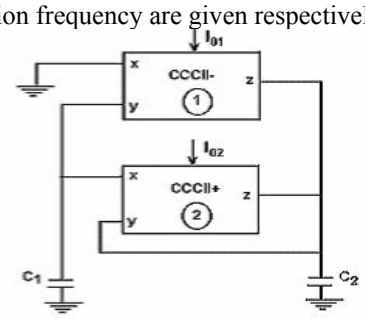

Fig. 2. Proposed CCCII based oscillator

$C_2 = C_1$ and $\omega_0 = (2/V_T)(I_{01}I_{02}/C_1C_2)^{1/2}$.

The frequency of oscillation can be adjusted independently by I_{01} or/and I_{02} and thus the circuit can work as current controlled oscillator. The oscillation condition can be adjusted by grounded capacitor C_1 and C_2.

Simulation Results

The characteristics of the proposed oscillator of Fig. 1 have been investigated by PSPICE simulation. All PSPICE simulations have been undertaken using nominal parameters for transistors of bipolar arrays ALA 100. The circuits of CCII+ and CCII- were realized by schematic represented in Ref. 3. The simulated output waveform of circuit of Fig. 1 is shown in Fig. 3 with power supplies of ±10V, C_1 = 11nF, C_2 = 10nF and R_1= R_2=1K. The plot of simulated and theoretical frequency of oscillation vs. grounded resistor R_1(R_2 = 1K) is shown in Fig. 4. Total harmonic distortion is shown in Fig. 5 against various oscillation frequencies. The simulated results agree well with the theoretical prediction

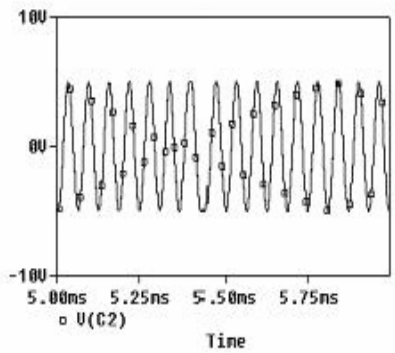

Fig.3. Simulated oscillations obtained from circuit of fig.1

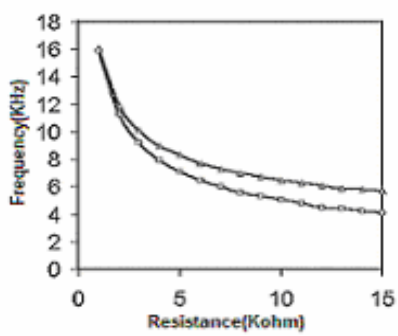

Fig. 4. Variation of frequency of oscillation

Simulated Theoretical

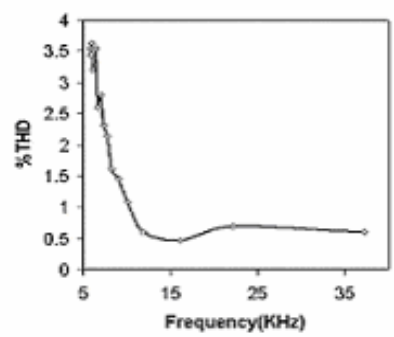

Fig. 5. Variation of % THD

Simulated

Conclusion

A new sinusoidal oscillator using second generation current conveyor has been presented and extended for current controlled conveyor. Both the circuits use two current conveyors, two grounded capacitors and the circuit with CCII uses two resistors whereas the circuit with CCCII does not use any external resistor. The oscillation frequency can be adjusted by grounded resistor for circuit with CCII and by bias current in case of CCCII based circuit, thus the later one may be referred as current controlled oscillator. Although the proposed circuits use the same number of conveyors, resistors and capacitors as the previous one presented by Horng [11], the present oscillator topology is different and has remarkably lesser % THD compared to the previous one.

Reference

[1] B. Wilson, "Recent developments in current conveyors and current mode circuits," *IEE Proceedings-G*, pp. 63 – 77, 1990.

[2] C. M. Chang, "Novel current conveyor based single resistance controlled voltage controlled oscillator employing grounded resistors and capacitors," *Electronics Letters,* 30, pp.181-183, 1994.

[3] J. W. Horng, C. W. Chang, and M. H. Lee, "Single-element-controlled sinusoidal oscillations using CCIIs," *Int. J. of Electronics.*, 78, pp. 831–836, 1997.

[4] S. I. Liu, "Single resistance controlled /voltage controlled oscillator using current conveyors and grounded capacitors," *Electronics Letters.*, 31, pp. 337 - 338, 1995.

[5] R. Nandi, "Precise insensitive tunable RC-oscillator realization using current conveyors," *IEE Proceedings – G*, 133, pp.129-132, 1986.

[6] M. T. Abuelma'atti,, A. A. Al-Ghumaiz, and M. H. Khan, "Novel CCII – based single element controlled oscillators employing grounded resistors and capacitors," *Int. J. of Electron*ics, 78, pp. 1107-1112, 1995.

[7] M. T. Abuelma'atti and A. A. Al-Ghumaiz, "Novel CCI – based single element controlled oscillators employing grounded resistors and capacitors," *IEEE Trans. Circuits and Syst.-I*, 43, pp.153-155, 1996.

[8] A. Fabre, O. Saaid, F. Wiest, and C. Boucheron,"Current controlled band pass filter based on translinear conveyors," *Electronics Letters.*, 31, pp. 1727-1728, 1995.

[9] W. Kiranon, J. Kesorn, W. Sangpisit, and N. Kamprasert, "Electronically tunable multi- function translinear – C filter and oscillator," *Electronics Letters,* 32, pp.1330-1331, 1997.

[10] W. Kiranon, J. Kesorn, and P. Wardkein,, "Current controlled oscillator based on translinear conveyors," *Electronics Letters*, 33, pp. 573-574, 1996.

[11] J. W. Horng, "A sinusoidal oscillator using current-controlled current conveyor," *Int. J. of Electronics,* 88, pp. 659 – 664, 2001