Software Definable Radio Networks for the Ubiquitous Networks

Katsutoshi Tsukamoto

Department of Information and Communications Technology,

Division of Electrical, Electronic and Information Engineering, Osaka University

Yamada-oka 2-1, Suita, Osaka 565-0871, Japan

email: tukamoto@comm.eng.osaka-u.ac.jp

ABSTRACT

Software Definable Radio Networks (SDRN) is proposed to realize a universal platform for various types of wireless services under the multi air interferences coexistence in ubiquitous networks. The SDRN is configured with universal radio base stations, radio on fiber networks, and software definable radio gateway that connects to global IP networks. This paper describes the concept of the SDRN, Radio on Fiber network techniques, its extension to RoR or RoFSO networks, and discusses the importance of Radio Agents in the SDRN.

INTRODUCTION

In ubiquitous network society, users should be offered the environment to access any communication service at any time, any place, and any situations. In order to realize the ubiquitous networks, the combination of IP network and broadband wireless access will play an important role. IP network can become a global cross platform for heterogeneous communication services. The demand of users for various types multimedia services will be increasing more and more; therefore full IP connectivity will be required to accommodate the variety of contents. However, such diversification appears not only in application services but also in air interfaces of wireless access such as modulation formats, media access methods, and frequency bands. The heterogeneous wireless networks also strongly depend on users' different demand for applications, quality, latency, and moreover users' situation such as indoor, outdoor, and fast/slow mobility. Therefore, the platform for heterogeneous wireless network becomes a key issue to realize the ubiquitous network.

In the current wireless networks, various operators independently overlaid their own radio base stations and networks. This leads redundant equipments and investments on infrastructures, and prevents the quick start of a new wireless service. From the viewpoint of the improvement in the radio frequency utilization, microcellular is much effective, however, the implementation of different types of base station and networks provided by different operators prevent them from adopting microcellular due to its large investment.

Therefore, the future ubiquitous wireless networks will need the common platform, which can be commonly used by various types of wireless services under the multi air interferences coexistence. Software Definable Radio Networks (SDRN) have been proposed to realize such universal platform[1]. The SDRN is configured with universal radio base stations, radio on fiber networks, and software definable radio gateway (SDRGW) that connects to global IP network. This paper describes the concept of the SDRN, Radio on Fiber network technologies, its extension to RoFSO or RoR networks, and discusses the importance of Radio Agents on the SDRN.

CONCEPT OF SDRN

Figure 1 illustrates the configuration of the SDRN. The SDRN is composed with the radio on fiber networks that is also called "radio highway networks", universal radio base stations (RBS) for various types of wireless services with different types of air interfaces, and SDRGW (Software Definable Radio Gateway), which provides the seamless connectivity between local RoF networks and global IP network. The SDRN has following features:

・ Free Access Capability for Heterogeneous Wireless Services

Various types of radio terminals can access RBS equipped only wideband E/O and O/E, and their RF signals are transparently transferred in RoF network. The RoF network, which provide transparent entrance network between RBS and IP network, implement virtual free space for any radio signals in optical fiber by equipping routing function to transfer the radio signal to its desirable SDRGW.

・ Radio Ecology

RoF network can easily provide microcellular, and has the ability delivering appropriate radio frequency resource to users with the minimum power at any place and any time. Therefore, it can achieve higher frequency efficiency. With several distributed universal BS, macro diversity reception or interference canceling can be easily realized. Therefore, more improvement in frequency efficiency can be expected.

・ SDRGW and global connectivity

SDRGW has the function that the datagram in any radio signal are converted to IP packet, which are transferred to its center station altogether with the control channel signal. This can realize the global cross platform on the IP network for heterogeneous wireless services networks. We call this concept "Wireless over IP (WoIP)".

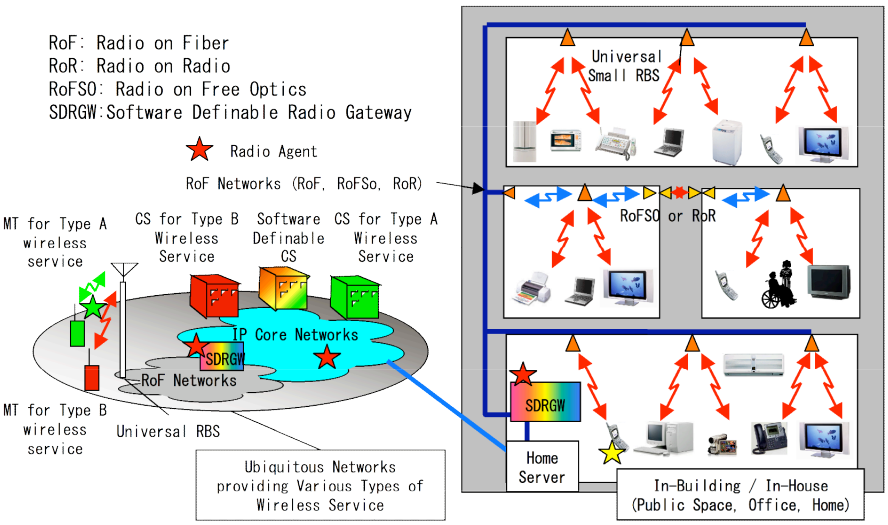

Fig.1 Concept and configuration of Software Definable Radio Networks (SDRN)

RADIO ON FIBER NETWORK TECHNIQUES

Radio on Fiber (RoF) links have the function of transferring radio signals into remote stations with keeping their radio format, such as radio frequencies, modulation formats, and so on. Consequently RoF link become a hopeful candidates of the common platform for various wireless access networks. When RoF equips photonic routing functions, any radio signal transferred on RoF can be routed to its destination control station. We call such RoF networks " Radio highway networks" illustrated in Fig. 2[2]. The radio access zone architecture employs conventional micro cellular or Pico cellular radio systems. However, the RBS receiving or transmitting radio signals in each radio zone, equips only the converter between radio signals and optical signals. The RBS requires neither the modulation functions nor demodulation functions of radio signals. The radio signals converted into optical signals are transferred via a RoF link with the benefit of its low transmission loss. Therefore, the RoF links can be independent of the radio signals format and can provide many universal radio access methods. This means that radio highway networks are very flexible to the modification of radio signal formats, the opening of new radio services, or the accommodation of some different types of radio signal formats. A remote central station, called the radio control station (RCS), executes the functions of modulation and demodulation of radio and other controls such as channel allocations, hand over processing and so on.

Such concentrated execution of their complicated function provides a much simplified and cost effective radio access network and promises easy realization of recent advanced demodulation techniques, such as macro diversity, hand over control, and interference cancellations.

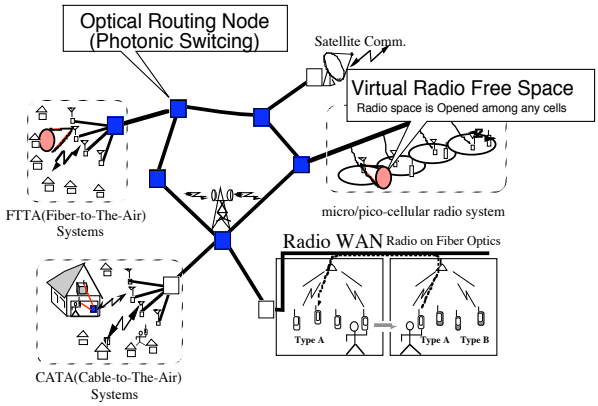

Fig.2 Radio highway networks

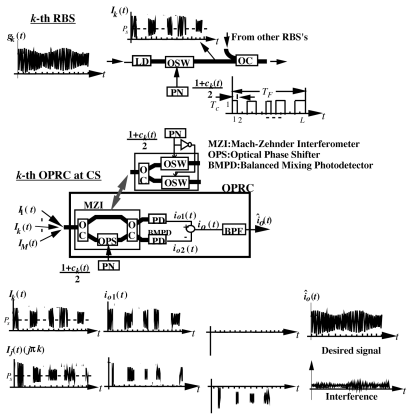

Fig. 3 configuration of DOS-CDMA radio highway

In order to realize radio highway networks, routing scheme becomes a key issue. The optical CDMA method will be a preferable candidate as a multiple access method for the uplink of radio highway networks. Because of its asynchronous access property, flexibility and transparency for various radio air interfaces. The proposed direct optical switching (DOS)-CDMA scheme can be performed only with an optical switch (OSW) at the transmitter and also an OSW, a photo detector (PD), and an electrical band pass filter (BPF) at the receiver[3][4]. Therefore, any types of radio signal can be converted into optical IM / CDMA signals. In the DOS-CDMA scheme, multiplexing is performed by randomizing positions of optical pulses at an OSW driven with a pseudo noise (PN) unipolar code sequence such as optical orthogonal code (OOC). Furthermore, when the DOS-CDMA scheme employs the optical polarity reversing correlator (OPRC) to use bipolar PN codes, which are usually used in CDMA radio systems, the number of multiplexed radio signals can be increased. Figure 3 illustrates the configuration of DOS-CDMA radio highway.

In the Radio highway, RoF networks can be replaced by RoFSO (Radio on Free-Space Optics) or RoR (Radio on Radio) networks. In each network, radio signals are converted into optical free-space optic signals or MMW signals with wideband frequency conversion. The Layer 1 routing realized by RoF, RoFSO, and RoR would be important for the transparency not only for various protocols on Layer 2 and upper, but also for various types of air interfaces(Fig. 4).

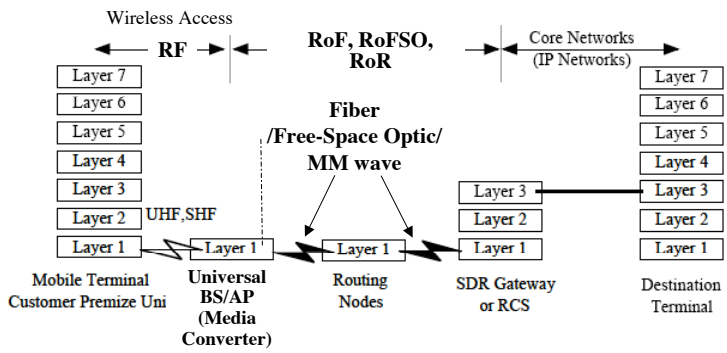

Fig.4 Layer 1 routing realized by RoF, RoFSO, and RoR

RADIO AGENTS

The SDRN can realize the frequency spectrum delivery to users, but its operation should be performed not only to enhance frequency efficiency but also to satisfy users' and operators' demands. Even if accessing the same wireless

services, user utilities depend on their mobility and situations. In order to realize such session handover or service handover in wireless heterogeneous network, we need the Radio Agent on Layer 7, which controls layer 1-3 according to users' and operators' demands. The control is also performed considering radio regulations. Radio Agents equipped at user terminal, SDRGW, and IP Network, are middle ware on Layer 7 as shown in Fig. 1. For example, Radio Agents can be realized by the SIP mobility functions. Figure 5 illustrates an example for media handover agent, which changes wireless media according with user's demand and mobility [5]. In the example, a user has multi-service terminal that can access both of cellular BS and WLAN AP. Radio Agent implemented at SIP stack in the terminal decides a accessible BS/AP considering users' preference, mobility, and situation, and executes wireless media handover without any termination of the session.

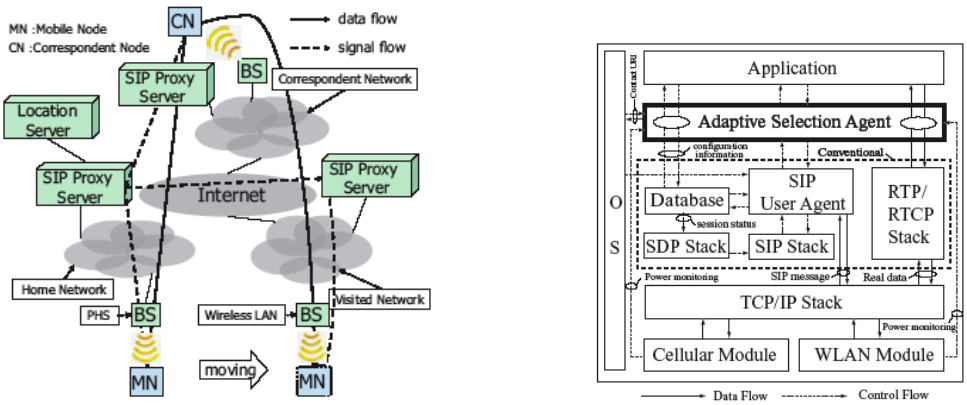

Fig.5 Radio Agents for Wireless media handover using SIP at layer 7.

CONCLUSIONS

This paper described the system requirement for ubiquitous networks and proposed Software Definable Radio Networks (SDRN) to realize a universal platform for various types of wireless services under the multi air interferences coexistence. To realize SDRN, Radio on Fiber network techniques, its extension to RoR and RoFSO networks, and Radio Agents on the SDRN have been discussed.

ACKNOWLEDGEMENT

I thank Prof. Komaki and all colleagues of Komaki Lab, Osaka. Univ. This study is partially supported by a Grants-in-Aid for Scientific Research (B) No. 14350202, from the Japan Society for the Promotion of Science.

REFERENCES

[1]S. Komaki :"Microwave Technologies for Software Radio Networks", Proceedings of APMC2003, Vol.3, No.FC7-1, pp.1780-1785, (November 2003).

[2]S. Komaki, K. Tsukamoto, M. Okada, H. Harada :"Proposal of Radio High-way Networks for Future Multimedia-personal Wireless Communications", 1994 IEEE ICPWC 94', Bangalore India, Vol.1, No.1, pp.204-208, (August 1994).

[3]S. Park, K. Tsukamoto, S. Komaki :"Proposal of Direct Optical Switching CDMA for Cable-To-The-Air system and its performance analysis", IEICE Trans. Commun., Vol.E81-B, No.6, pp.1188-1196, (June 1998).

[4]K. Tsukamoto, T. Higashino, T. Nakanishi, S. Komaki :"Direct Optical Switching Code Division Multiple Access System for Fiber-Optic Radio Highway Networks", IEEE J. of Light. Technol., Vol.21, No.12, pp.3209-3220, (December 2003).

[5]K. Kawaguchi, Y. Minoda, K. Tsukamoto, S. Komaki,"An Idea of Handover Algorithm for Adaptive Selection Agent of Wireless Service with SIP", APWCS2005 (appeared in Aug. 2005).