A NEW CONCEPT OF DIGITAL POWER LINE CARRIER COMMUNICATION FOR RURAL APPLICATIONS

P K DALELA[1] , M V S N PRASAD[2] , ANAND MOHAN[3]

1. ***C-DOT, Mandigaon Road, Opp. New Manglapuri, Chatterpur, Mehrauli, New Delhi-110030, India pdalela@yahoo.com***
2. ***National Physical Laboratory, DR K S Krishnan Road, New Delhi-110012, India mvprasad@mail.nplindia.ernet.in***
3. ***Centre for Research in Microprocessor Applications, Department of Electronics Engineering Institute of Technology, Banaras Hindu University, Varanasi-221005, India amohan@bhu.ac..in***

ABSTRACT:

This paper describes cost-effective technique for the implementing rural wireless communication network by exploiting remote RF concept and using existing power line as a physical medium. System level simulation consisting of power line communication (PLC) transmitter and receiver has been carried out using Simulink 5.0 for noise evaluation. PLC transmitter and receiver system is proposed using forward error correcting codes (FEC) and orthogonal frequency division multiplexing (OFDM). It is shown that OFDM can be effectively utilised for base band signal modulation to achieve both reduced EMI and improved signal-to-noise ratio. MATLAB simulation results indicating the probable choice of carrier frequencies for PLC are presented.

INTRODUCTION:

There is a great disparity between the rural and urban masses in respect of access to Information and Communication Technologies (ICTs) and thus leading to greater *digital divide* between them. Although numerous techniques have been proposed to minimize this gap by effectively extending ICTs for rural applications to provide locally applicable content and services but they prove to be expensive due to requirements of wireless infrastructure.

Recently, there has been resurgence of interest in using the existing power line for rural communication as implementation of orthogonal frequency division multiplexing (OFDM) has become feasible due to technological advancements. This has opened the gateway for achieving improved SNR (signal to noise ratio) using PLC and utilizing the easily accessible rural power line as communication medium. Further, the cost of communication can be drastically reduced by using remote RF in which the existing mobile wireless networks or traditional circuit switched networks of urban areas can be extended to rural areas [1] [5] [6]. The suggested technique can thus provide cost effective solution for implementation of wireless communication network without the need of exclusive wireless infrastructure. The PLC can be used to extend the connection between a wireless radio base station and its antenna, in circuit switched networks similar concept is implemented via VoIP (voice over IP). This extension can be to provide wireless services to new and remote areas using radio equipment from an existing location.
This is achieved by transmitting the base band signal through already existing power line to remote rural areas, while the remote RF is proposed to provide all the necessary backend support for communication network protocol implementation and resource sharing. The signal processing techniques along with the OFDM offers better solution for transmission of base band signal on power line. It has been shown that OFDM [9] is relatively immune to EMI, which has been the prime driving force in studying its SNR performance for PLC [1]. Our simulation results indicate that OFDM has greater potential for its use in PLC due to having reduced EMI and thus it has been used for generating base band signal that is launched on power line.

BACKGROUND:

The application for the power line communication would be a system where the wiring would impose the main expenses and a radio based system would not be feasible or too expensive. These prerequisites for power line communication system would be met by high voltage or medium voltage power lines because power cables are up to several tens/hundreds of kilometers and approaching even remote and rural areas. In addition to this PLC requires less bandwidth.

The voice and data can be integrated using VoIP leading to development of a myriad of multimedia applications. The international Telecommunications Union (ITU) emphasizes that VoIP can be used in certain areas without the need for fixed line access [7]. For an example, it can be combined with wireless data technologies, such as Wi-Fi, to serve rural and remote areas. It is also cheaper for consumers due to the tariff structure. However, when using VoIP, consumers face a trade off between price and quality. The ITU suggest nevertheless that VoIP can be used to enhance access to basic telecommunications. Hassan *et al.* argue that VoIP gives rise to low cost voice calls [8] and several calls can share the same bandwidth. This is because there is no need for a dedicated communication line per each call as in Plain Old Telephone Service (POTs).

MATLAB SIMULATION:

The base band signal from legacy networks to provide backend infrastructure support has been generated by Bernoulli binary generator [3] block (512 kbps). Reed Solomon (RS) double error correcting (15,11) code has been used as FEC code for base band signal to be sent to remote RF system. Coherent QPSK modulation and training (pseudo noise sequence generation) blocks are used to provide input to OFDM symbol generation (IFFT add cyclic prefix block). Training insertion block identifies training pattern in OFDM symbol and place them at predefined position in OFDM symbol to facilitate training process. The parallel to serial (P/S) conversion block converts parallel data in to serial form which is sent through power line using PLC coupler. The PLC noise [2] [10] is predominantly due to radio frequency interference [4] [11] and impulsive noise. The development of PLC noise block is based on the assumption that impulsive noise is generated because of switching of inductive loads. The switching inductive loads on the power line cause fluctuating power factor which produces harmonics that interferes with carrier frequency of lower side of spectrum used and hence generates noise.

The PLC receiver section is similar to the transmitter. The channel estimator and channel compensation blocks are used to characterise the fluctuating noisy channel of power line and hence to improve SER. The complete Simulink 5.0 system level block diagram is shown in figure 1. The symbol error rates (SERs) with and without RS FEC code can be observed in scope1 and scope2 respectively. It can be seen that SER is less with RS FEC code.

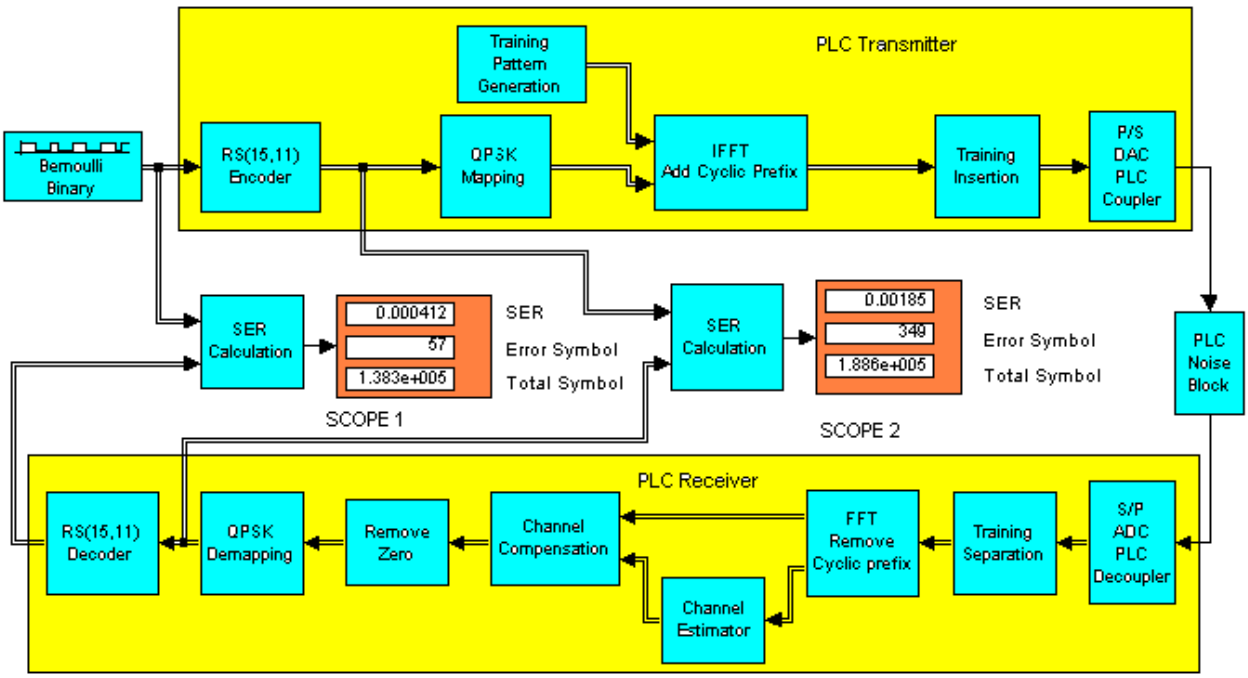

Figure 1: Block Diagram of PLC System

Figures 2-13 show PLC noise spectral density as function frequency due to switching of inductive load. The MATLAB 6.5 R13 simulation results up to 500 KHz are given in figs.2-7 while figs.8-13 show the noise variation up to 1 MHz. The 11KV and 440KV power lines with inductive load switching interval of 0.1 nsec. are considered in figs. 2 / 8 and 3 / 9 respectively. The 11KV and 440KV power lines with inductive load switching interval of 1.0 nsec. are considered in figs. 4 / 10 and 5 / 11 respectively while figs. 6 / 12 and 7 / 13 indicate the corresponding values for switching interval of 5 nsec. It can be observed that the inductive switching noise reduces drastically above 1.5 MHz.

Fig 2
Fig 3
Fig 4
Fig 5
Fig 6
Fig 7

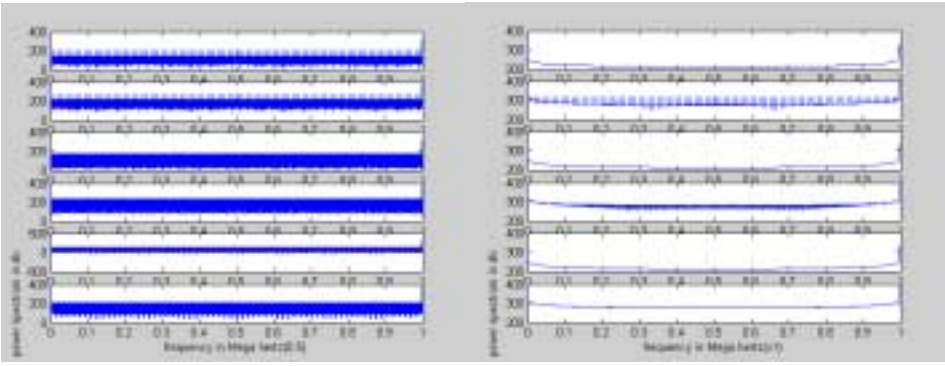

Fig 8
Fig 9
Fig 10
Fig 11
Fig 12
Fig 13

Figures 2-13: Power Spectral Density of Harmonics

Power line noise is known to affect the performance of broadband power line communication significantly. This paper presents frequency domain approach to analyze power line noise which is based on dynamic variation in inductive load. Figure 14 shows SER variation with SNR.

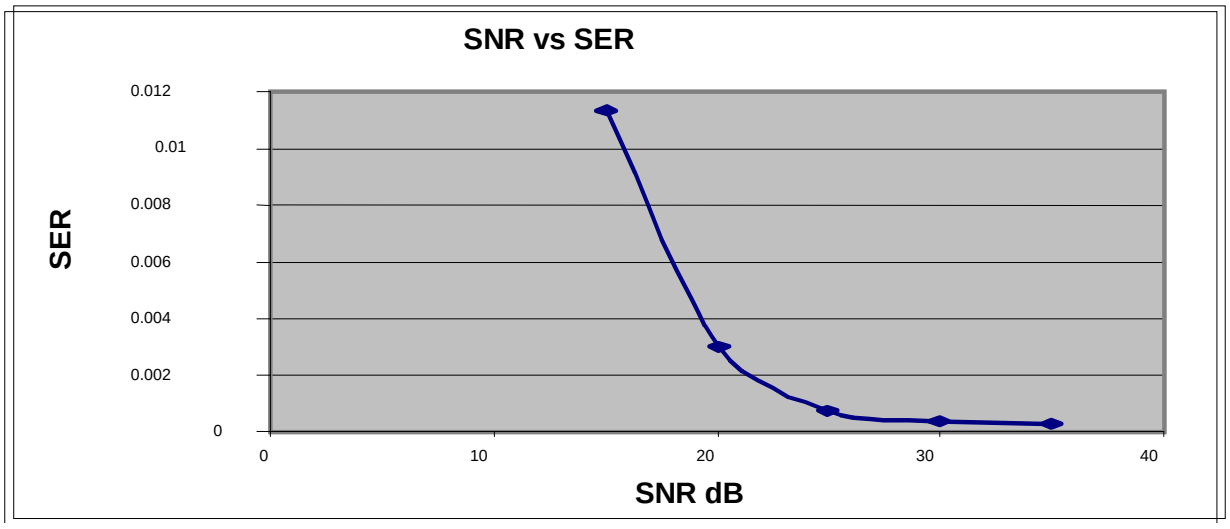

Figure 14: Plot of SER vs. SNR

CONCLUSION:

System level simulation of digital power line carrier communication is carried out by considering all the basic building blocks. It is shown that RS FEC code can be effectively used to reduce SER and hence improve the performance of PLC. The variation in symbol error rate (SER) as function of signal to noise ratio (SNR) of launched power line baseband signal is given in fig.14. The proposed remote RF concept along with improved PLC performance can find useful application in implementing cost effective PLC for rural/remote areas. The performance and throughput of the proposed system can further be improved using turbo or LDPC codes.

REFERENCES:

[1] P K DALELA , M V S N PRASAD , ANAND MOHAN, " Implementation of Remote RF using Power Line Communication-Rural Wireless in Indian Perspective", IEEE ICPWC2005 p. Jan 23-25,2005, New Delhi, INDIA

[2] H.Meng, Y.L.Guan, Member IEEE, and S.Chen, Senior Member, IEEE, " Modeling and Analysis of Noise Effects on Broadband Power-Line Communications", IEEE Transaction on Power Delivery,vol.20,NO.2,April 2005

[3] www.mathworks.com

[4] Rec. ITU-R P.372-8

[5] A.J.Cooper, BT Laboratories, England, " Fibre-Radio: A New Technique for Delivering Cordless Access Services" IEEE GLOBECOM'91, p. 0999-1005.

[6] A.J.Copper, D.Mack and R.P.Merrett, " CTPON-Cordless Telephony Services Over a Passive Optical Network Using Fibre Radio Techniques", IEEE ICC'92, p.0091-0096.

[7] I. Telecommunications Union, "IP Telephony," *ITU Internet Reports*, 2001, Available: http://www.itu.int/osg/spu/wtpf/wtpf2001/.

[8] M. Hassan, A. Nayandoro, and M. Atiquzzaman, "Internet Telephony: Services, Technical Challenges, and Products," *IEEE Communications Magazine*, vol. 38, no. 4, pp. 96–103, 2000.

[9] Simon Haykin "Communication Systems" , 4th Edition, John Wiley & Sons, Inc. 2004.

[10] Klaus Dostert, "EMC Aspects of High Speed Powerline Communications", Proceedings of the 15th International Wroclaw Symposium and Exhibition on Electromagnetic Compatibility, Wroclaw, Poland. ISBN: 83-901999-0-4.

[11] ZW. Zhao and I-Ming Chen, "Moving Home Plug To Industrial Applications with Power Line Communication Network" , Singapore-MIT Alliance Program, Nanyang Technological University, Singapore 639798.