MOBILE BROADBAND ANTENNAS

Juha Villanen, Jari Holopainen, Outi Kivekäs, and Pertti Vainikainen

Helsinki University of Technology, IDC/SMARAD/Radio Laboratory
P.O. Box 3000, FI-02015 TKK, Finland
Tel: +358 9 4512250, Fax: +358 9 4512152, E-mail: juha.villanen@tkk.fi

ABSTRACT

This paper describes some of the latest developments in the area of small antennas for mobile terminals. A novel coupling element based GSM850/900/1800/1900 quad-band antenna structure occupying a volume of only 0.7 cm^3 is presented. Also the possibility of implementing internal mobile terminal DVB-H antennas using low-volume coupling elements is shortly discussed. Further, latest results on the basic mechanisms governing the energy absorption in human tissues due to the near fields of mobile handset antennas are summarized.

INTRODUCTION

Recently, the trend in mobile communications has been developing towards significantly thinner and shorter mobile terminals, with very limited space available for the antenna elements. Internal multi-band antennas have mainly been implemented with self-resonant PIFA (Planar Inverted-F Antenna) type antenna elements placed on top of the ground plane [1-5]. By utilizing parasitic resonators, such antenna structures can be tuned to simultaneously cover the operating bands of the E-GSM900, GSM1800, GSM1900 and UMTS systems [1-5]. These antenna elements, however, occupy volumes from 4.6 cm^3 [2,5] up to 9.3 cm^3 [3] and have heights from 7 mm [1,4] up to 8.5 mm [3]. In [6,7], meandered self-resonant internal monopole antennas placed totally outside the perimeter of the chassis were studied. The volumes occupied by the antenna elements covering the operating bands of the GSM850/900/1800/1900 systems were 3.4 cm^3 [6] and 5.5 cm^3 [7]. The heights of the antenna elements were 6.5 mm [6] and 13 mm [7]. The research results presented in [8-10] suggest that by utilizing non-resonant coupling elements, very low-volume internal mobile terminal antennas can be implemented. In this paper, a novel coupling element based quad-band GSM850/900/1800/1900 antenna structure having a world-record volume (0.7 cm^3) and a very low-profile (4 mm) is introduced. Also extremely low-volume DVB-H antennas can be implemented by utilizing the modular idea of the coupling elements, as described in this paper. The general energy absorption mechanisms in human tissue are also shortly discussed.

ENERGY ABSORPTION MECHANISMS IN HUMAN TISSUE

The general energy-absorption mechanism in human tissue has been studied for different tissue types [11]. The results lead to the conclusion that the peak *SAR* is not actually related to the antenna current, as has been commonly believed. Instead, high values of the real part of permittivity cause the perpendicular electric-field components to be attenuated substantially in the tissue, and the *SAR* maximum can then be found in a location with low total original electric field but significant components parallel to the surface of the tissue.

COUPLING ELEMENT DESIGN CONSIDERATIONS

The coupling element based antenna structure consists of three main parts. The first part is the mobile terminal chassis, which is meant to work as the main radiator of the antenna structure. Coupling elements are used to excite the primary wavemodes of the chassis as efficiently as possible. Impedance matching to the transceiver electronics is produced with a matching circuitry. In order to couple to the chassis wavemode efficiently, the location and shape of the coupling element have to be chosen correctly. The strongest coupling (and largest bandwidth) can be achieved by bending the coupling element over the shorter end of the chassis [10]. The modularity of the idea enables the use of several coupling elements to cover several separate frequency bands, e.g. those of GSM900 and GSM1800 [9]. Also, a coupling element can be divided into several smaller elements, each covering separate parts of e.g. the DVB-H band. The idea is illustrated in Fig. 1 (left Fig.) [9].

The matching circuitry can be designed to produce a single-band, multi-band, or multi-resonant frequency response for the antenna structure. The used lumped or distributed elements can be implemented by utilizing many of the well-known RF circuit technologies. For example, multi-layer LTCC (Low-Temperature Co-fired Ceramic) substrates can be used to realize extremely low-volume integrated passive inductors, capacitors and transmission lines [12]. Several matching circuitries can be used to cover several separate frequency bands (see Fig. 1). Also, a combination of the two ideas presented in Fig. 1. is possible, i.e. the use of several single- or

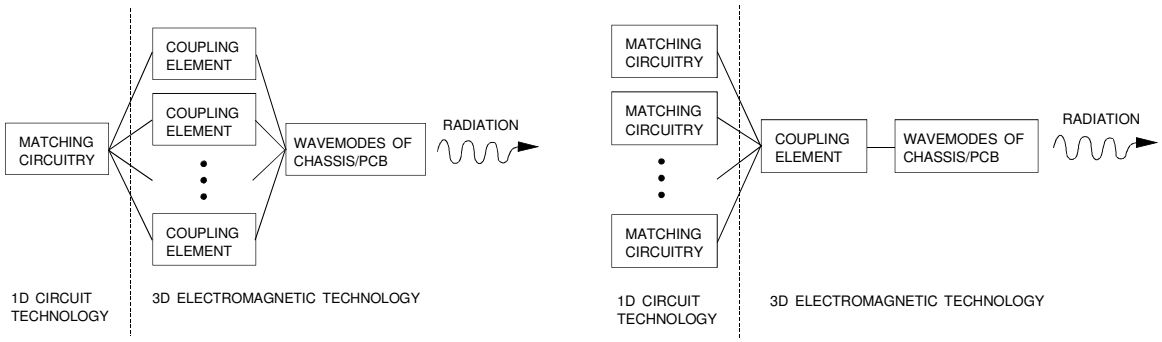

Fig. 1. Block diagrams of different antenna structure implementation possibilities [9].

multi-resonant matching circuits connected to several coupling elements. As part of this work, the idea presented in Fig. 1 (right Fig.) was used to implement internal low-volume DVB-H antennas for mobile terminals. Two single-band matching circuits, each covering part of the DVB-H band (470 MHz – 702 MHz), were connected with a switch to a coupling element with a volume of only 1.5 cm^3. Also, an antenna structure having a dual-resonant matching circuit was considered. The studied DVB-H antennas fulfilled the DVB-H realized gain specification with a clear safety margin. Currently, the results have only been published in [13].

PROTOTYPE ANTENNA

The quad-band prototype antenna studied in this paper consists of a ground plane, matching circuitry, and two separate coupling elements for the GSM850/900 and GSM1800/1900 bands. Fig. 2. presents the layout of the prototype antenna. Both coupling elements are shaped and located optimally at the end of the ground plane to achieve the strongest possible coupling to the chassis wavemode within the used volume. The coupling elements occupy a world-record volume of only 0.7 cm^3. The coupling elements were fabricated by photoetching from a 0.2 mm thick sheet of tin bronze ($\sigma = 0.8 \cdot 10^7$ S/m). Pieces of Styrofoam were used to support the coupling elements. The upper metallic surface of the dielectric substrate (RT Duroid 5870, $\sigma = 5.75 \cdot 10^7$ S/m, $\tan\delta = 0.0012$, $\varepsilon_r = 2.33$) was used as the ground plane for the antenna structure.

The coupling elements were separately matched using dual-resonant matching circuits. At the end of the matching arrangement, the two matching circuits were combined to get just a single feed for the antenna structure. The exact geometry of the matching circuitry is shown in Fig. 3. The microstrip lines of the matching circuitry were photoetched on the bottom side of the dielectric substrate. The lumped inductors were chosen from Murata's LQW18A10-series (± 2 % tolerances). The lumped capacitors were chosen from ATC's (American Technical Ceramics) 600S-series (± 0.05 pF tolerances). In IE3D simulations, Murata's and ATC's S-parameter files were used to characterize the lumped inductors and capacitors. It should be noted that the matching circuitry has not been optimized with respective to the occupied PCB volumes. Based on the results presented e.g. in [12], is obvious that if integrated into the LTCC RF front-end module of a mobile terminal, the matching circuitry of the prototype would occupy only negligible PCB volume and have high efficiency.

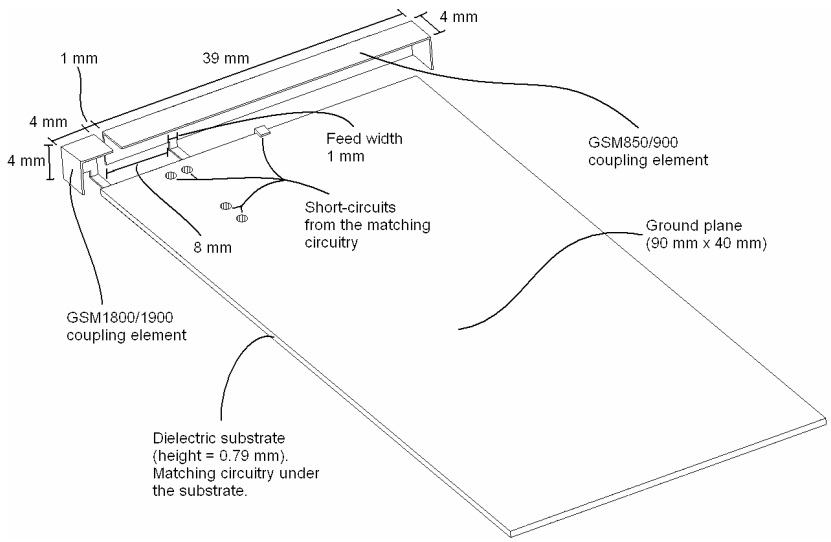

Fig. 2. Layout of the prototype antenna. Matching circuitry is not visible in the picture.

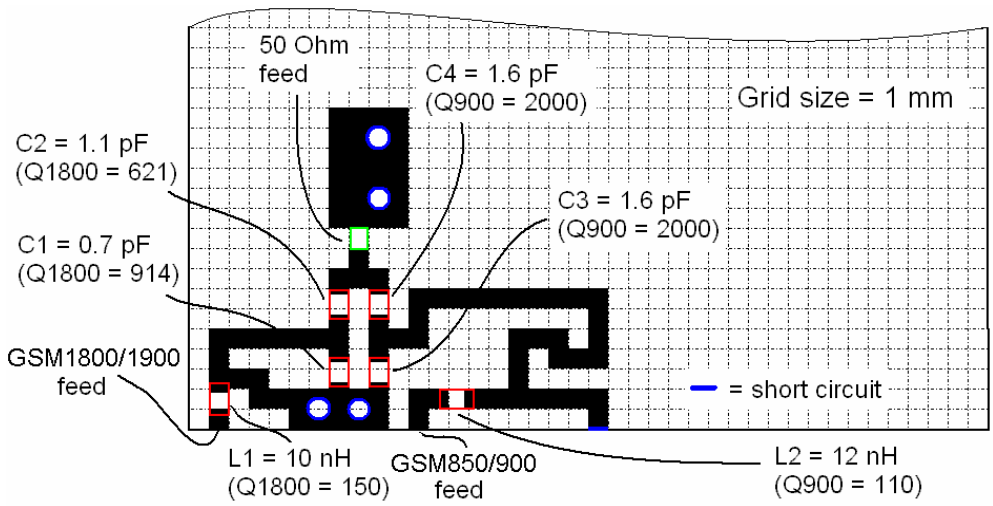

Fig. 3. Exact geometry of the prototype antenna matching circuitry (close-up view on the end of the chassis). Short circuits are marked with blue color. Lumped elements are marked as red boxes and the feed of the antenna structure is marked with a green box. The black lines represent microstrip lines. The grid size is 1 mm.

SIMULATION AND MEASUREMENT RESULTS

The simulated (IE3D) and measured frequency responses of the reflection coefficients for the prototype antenna are presented in Fig. 4. According to Fig. 4, the input reflection coefficient of the prototype has a quad-resonant behavior. The measured resonant frequencies of the prototype antenna are somewhat higher than the simulated ones at both the upper and lower bands. The differences between the measured and simulated resonant frequencies are most probably caused by the inaccuracies of the lumped element S-parameter files used in the simulations. The resonant frequencies of the prototype, however, can rather easily be tuned down by slightly changing the lumped component values in the matching circuitry. The simulated and measured $|S_{11}| \leq$ -6 dB absolute and relative bandwidths (BW,B_r) in the lower and upper bands are presented in Table 1. According to simulations and measurements, the prototype obviously has enough bandwidth potential for simultaneously covering the operating bands of the GSM850/900/1800/1900-systems.

Throughout the whole GSM850/900 frequency band, the simulated and measured free space realized gain patterns of the prototype antenna resembled that of a dipole antenna, as in [10]. At the GSM1800/1900 band, the radiation pattern shapes were more complex. The simulated and measured free space radiation efficiencies of the prototype antenna are presented in Table 1. The reported values are the minimum radiation efficiencies obtained in the simulated/measured $|S_{11}| \leq$ -6 dB impedance bands. Based on the author's experience, at least at the GSM1800/1900 bands, the used measurement system somewhat underestimates the radiation efficiencies of the devices under test. Also, the lumped elements can in reality be lossier than expressed by the manufacturer's S-parameter files, which might cause the differences between the simulated and measured radiation efficiencies.

The *SAR*s (Specific Absorption Rate) and radiation efficiencies of the prototype antenna beside a head model were studied at 900 MHz and 1800 MHz with a commercial 3D electromagnetic solver, SEMCAD (by SPEAG).

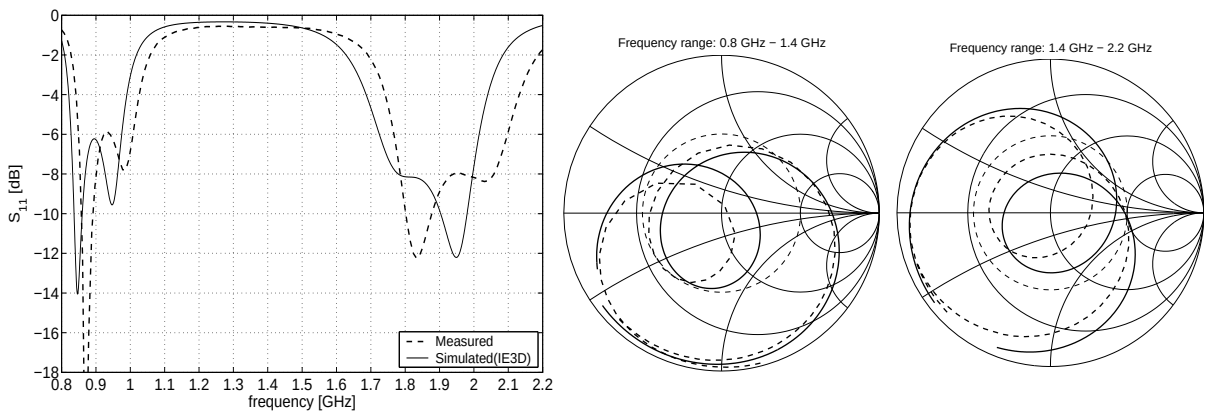

Fig. 4. Simulated (solid line, IE3D) and measured (dashed line) frequency responses of the reflection coefficients for the prototype antenna. The dashed circles on the Smith charts represent $|S_{11}|$ = 6 dB.

Table 1. Summary of the prototype simulation and measurement results.

	Simulated		Measured	
Parameter	**lower band**	**upper band**	**lower band**	**upper band**
***BW* [MHz]**	827 - 975	1725 – 2015	849 – 1008	1767 – 2098
B_r **[%]**	16.4	15.5	17.1	17.1
η_r **[%]**	≥ 75	≥ 87	≥ 67 ± 5.0	≥ 68 ± 5.0
$\eta_{r,head}$ **[%]**	17 (900 MHz)	33 (1800 MHz)	-	-
$SAR_{10g,avg}$ **[W/kg]**	1.8 (900 MHz)	1.0 (1800 MHz)	-	-

The prototype antenna without the matching circuitry was placed beside a homogenous head model in the standard "cheek" position. The distance from the bottom of the dielectric substrate to the ear reference point was 7 mm. The loud speaker location of the phone was assumed 10 mm from the upper end of the chassis. SEMCAD assumes infinite conductivity for the metal parts of the antenna structure. In order to account for the metal losses and the losses from the matching circuitry, the simulated free space radiation efficiencies of the prototype (85 % at 900 MHz and 90 % at 1800 MHz) were subtracted (in dB) from the SEMCAD simulation results. The simulated *SAR*s and radiation efficiencies are listed in Table 1. The reported 900 MHz and 1800 MHz 10 g averaged *SAR*s have been normalized to 250 mW and 125 mW input powers, respectively. The simulated $SAR_{10g,avg}$ are below the European upper limit for *SAR* (2 W/kg). According to Table 1, the radiation efficiencies of the prototype beside the head model are rather low. Since the coupling elements of the prototype antenna are placed totally outside the chassis, and bent towards the users head, the electric-field components tangential to the users head are larger than in the traditional designs, where the antenna elements are placed totally on top of the chassis. The radiation efficiency of e.g. a traditional PIFA, however, would most probably be affected in the same way if the self-resonant antenna element would be placed outside the perimeter of the chassis.

CONCLUSIONS

This paper presents a study on some of the latest results in broadband antennas of mobile terminals. An extremely low-volume and low-profile quad-band antenna structure for GSM850/900/1800/1900 was designed, manufactured, and measured. The coupling elements of the studied antenna occupy a total volume of only 0.7 cm^3, making the antenna structure suitable for use in future portable applications. In this work, coupling elements were also used for implementing low-volume DVB-H antennas for mobile terminals. The studied antennas satisfy the DVB-H specification with a coupling element volume of only 1.5 cm^3. The energy absorption mechanism in the human tissues was shown to be mainly defined by the directions of field lines of the quasi-static electric near fields.

REFERENCES

[1] J. Ollikainen, O. Kivekäs, A. Toropainen, and P. Vainikainen, "Internal dual-band patch antenna for mobile phones", *Proc. AP2000 Millennium Conference on Antennas and Propagation*, Davos, Switzerland, April 2000, paper p1111.pdf.

[2] Y. –X. Guo, M. Y. W. Chia, and Z. N. Chen, "Miniature built-in multiband antennas for mobile handsets", *IEEE Transactions on Antennas and Propagation*, Vol. 52, No. 8, August 2004, pp. 1936-1944.

[3] P. Ciais, R. Staraj, G. Kossiavas, and C. Luxey, "Design of an internal quad-band antenna for mobile phones", *IEEE Microwave and Wireless Components Letters*, Vol. 14, No. 4, April 2004, pp. 148-150.

[4] S. Yong-Sun, K. Byoung-Nam, K. Won-Il, and P. Seong-Ook, "GSM/DCS/IMT-2000 triple-band built-in antenna for wireless terminals", *IEEE Antennas and Wireless Propagation Letters*, Vol. 3, 2004, pp. 104 – 107.

[5] M. Martinez-Vázques, and O. Litschke, "Quadband antenna for handheld personal communications devices", *IEEE Antennas and Propagation Society International Symposium*, Vol. 1, Ohio, USA, June 2003, pp. 455 – 458.

[6] P. –L. Teng, H. –T. Chen, and K. –L. Wong, "Multi-frequency planar monopole antenna for GSM/DCS/PCS/WLAN operation", *Microwave and Optical Technology Letters*, Vol. 36, No. 5, March 2003, pp. 350 – 352.

[7] Q. –Y. Lee, and K. –L. Wong, "Quad-band internal monopole mobile phone antenna", *Microwave and Optical Technology Letters*, Vol. 40, No. 5, March 2004, pp. 359 – 361.

[8] P. Vainikainen, J. Ollikainen, O. Kivekäs and I. Kelander, "Resonator-based analysis of the combination of mobile handset antenna and chassis", *IEEE Transactions on Antennas and Propagation*, Vol. 50, No. 10, October 2002, pp. 1433-1444.

[9] Pat. FI114260, *Modular coupling structure for a radio device and a portable radio device*, P. Vainikainen, J. Ollikainen, O. Kivekäs, and I. Kelander, Finland, Appl. 20002529, 17.11.2000, (15.09.2004), 22 p.

[10] J. Villanen, J. Ollikainen, O. Kivekäs and P. Vainikainen, "Compact antenna structures for mobile handsets", *IEEE VTC2003 Fall Conference*, Orlando, Florida, October 2003, CD-ROM (0-7803-7955-1), paper 08A_02.pdf.

[11] O. Kivekäs, T. Lehtiniemi, and P. Vainikainen, "On the general energy-absorption mechanism in the human tissue," *Microwave and Optical Technology Letters*, vol. 43, no. 3, Nov. 2004, pp. 195-201.

[12] O. -S. Lin, C. -C. Liu, K. -M. Li, and C. H. Chen, "Design of an LTCC tri-band transceiver module for QPRS mobile applications", *IEEE Transactions on Microwave Theory and Techniques*, Vol. 52, No. 12, 2004, pp. 2718 - 2724.

[13] J. Holopainen, *Antenna for Handheld DVB Terminal*, Master's thesis, Helsinki University of Technology, Espoo, May 2005, 93 p.