# Practical Studies on Calibration and Uncertainties of SAR Measurement

**Soichi Watanabe[(1)], Lira Hamada[(2)], Akira Suzuki[(3)], Yukio Yamanaka[(4)], Takashi Shinozuka[(5)], Yoshio Ichino[(6)] and Takashi Iwasaki[(7)]**

***[(1)]National Institute of Information and Communications Technology, Tokyo 184-8795, Japan, E-mail: wata@nict.go.jp***

***[(2)]As (1) above, but E-mail: hamada@nict.go.jp***

***[(3)]As (1) above, but E-mail: bell@nict.go.jp***

***[(4)]As (1) above, but E-mail: yama@nict.go.jp***

***[(5)]As (1) above, but E-mail: shino@nict.go.jp***

***[(6)]Telecom Engineering Center, Chiba 270-2222, Japan, E-mail: y_ichino@telec.or.jp***

***[(7)]Electro-Communication University, Tokyo 182-8585, Japan, E-mail: iwasakit@ee.uec.ac.jp***

**ABSTRACT**

SAR measurement methods for evaluation of compliance with the RF safety guidelines have been standardized. The calibration and validation of the measurement systems are important to maintain the reliability and reproducibility of the SAR measurements. Analysis of uncertainties of the SAR measurements is especially crucial because it gives quantitative accuracy. We have therefore performed various measurements to evaluate uncertainties relating to SAR measurements. In the presentation, we will demonstrate various uncertainties evaluated experimentally and also point out several problems in evaluation procedures described in the standard documents from a practical standpoint.

**INTRODUCTION**

SAR measurement methods for compliance tests of cellular telephones have been standardized [1, 2]. Under the standard procedures, a SAR probe, i.e. a small isotropic E-field probe, must be calibrated accurately. It is also required to evaluate uncertainties of the SAR measurement. Although there are many uncertainty factors in the SAR-probe calibration and in the SAR measurement with actual cellular phones, details of their characteristics have not been investigated enough.

Recently, new frequency bands have been available for cellular phone services in order to keep up with explosive increase of subscribers, and broad-band communication systems such as IMT-2000 have been started. It is therefore important to investigate the frequency characteristics of the SAR-probe calibration and of the uncertainty factors in the SAR measurement.

In order to perform practical uncertainty evaluation, regionality should also be considered. In Japan,

popular cellular phone terminals are different from other countries; large-screen foldable handsets, which are convenient to access Internet and to read/write text messages, are popular in Japan while small-screen straight/compact handsets are popular in other countries. This may result in different uncertainty evaluation related with “test sample”, which are defined as Type-A uncertainty or mean that the uncertainties are based on statistical observations.

In order to establish the SAR-probe calibration and to evaluate practical uncertainties in the SAR measurement in Japan, TELEC, NTT DoCoMo and NICT have been collaborating to study on these topics. In this paper, these studies are summarized.

## FREQUENCY CHARACTERISTICS OF SAR CALIBRATION [3]

In the standard procedures for compliance tests of cellular phones, maximum local SAR must be evaluated not only at the center frequency but also at highest, lowest, and some frequencies in the operated frequency band. However, the SAR calibration is usually performed only at the center frequency. We therefore investigate the frequency characteristics of the calibration factors of the SAR probes and evaluate the error of the measured SAR values due to the frequency characteristics of the calibration factors.

For SAR-probe calibration, we used the one-step procedure with the waveguide system as shown in Fig.1. The calibration procedures are almost same as those of the two-step procedure with the waveguide system, which are described in the standards [1,2]. At first, we calibrated the SAR probes at 1.95 GHz, the center frequency of the up-link frequency band of the W-CDMA system operated in Japan. Then we also calibrated the SAR probe at different frequencies between 1.85 GHz and 2.05 GHz. Finally, we performed the system validation (SAR measurement with a flat phantom and a dipole antenna).

When the same phantom liquid tuned at 1.95 GHz was used at the other frequencies, the deviation of the SAR-probe calibration factors between 1.85 GHz and 2.05 GHz was within 5 % from those at the center frequency, which is comparable with the deviation of the electrical properties in the same frequency

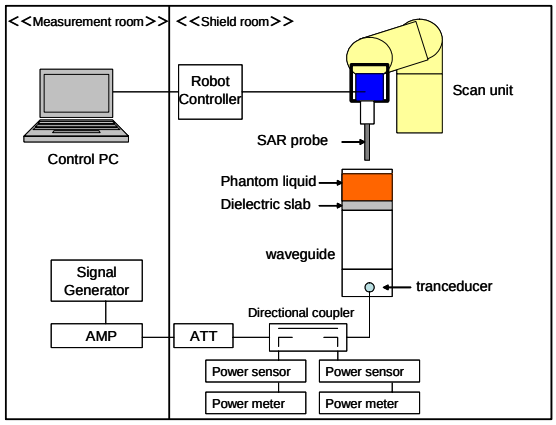


Figure 1: Setup for the SAR-probe calibration.

region. The measured SARs of the system validation were however significantly deviated, i.e. up to 16 % from the reference value which is calculated at the center frequency.

## UNCERTAINTIES RELATED TO SAMPLE DEVICES

The uncertainties due to the device holder and positioning of the devices are dependent on the shape of the devices. The international standards therefore recommend that those uncertainties should be periodically evaluated as the Type-A uncertainty.

We therefore performed Type-A uncertainty evaluation with 18 actual cellular phone devices which are popularly used in Japan. 13 devices of the tested ones are foldable with a large screen which are convenient to view Internet and read/write text messages.

We performed the uncertainty evaluation for the device holder following the procedures described in the international standards [1,2] and determined the standard uncertainty for 10-g SAR (4.6 %) based on the measurements with the 18 devices. We also found that the effect of the device holder tends to be larger for the devices operated at higher frequencies.

Furthermore we performed the Type-A uncertainty evaluation for the positioning of the devices following the procedures described in the international standards. Four operators positioned the devices with the SAM phantom. The standard uncertainty of the device positioning for 10-g SAR was 3.7 %.

## DISCUSSION

We have evaluated the frequency characteristics of the SAR-probe calibration and quantified their impact on the SAR measurements. We found the error of the SAR measurement at the other frequencies from the center/calibrated frequency is significantly larger than the deviation of the calibration factor of the SAR probe in the same frequency region. The electrical properties of the phantom liquid are also dependent on the frequency. Further investigation is therefore necessary to clarify frequency characteristics of various uncertainty factors as well as SAR-probe calibration.

We have evaluated the Type-A uncertainties due to the device holder and the device positioning. Although the standard uncertainty due to the device holder (4.6 %) is similar to that described in [2] as a typical value (5.0 %), it is necessary to continue to evaluate the uncertainty periodically in the future because the effect of the device holder tends to more significant at the higher frequencies used for new systems such as 3G (IMT-2000). It is also noted that the procedure to evaluate the uncertainty due to the device holder, described in the standards, was not completely applicable to the foldable devices; it was very difficult to set the devices just below the flat phantom.

The standard uncertainty due to the device positioning by four operators (3.7 %) was significantly lower than that described in [2] as a typical value (6.0 %) although the positioning of a device significantly

affects on the SAR measurements [4]. In our experiments, the operators consist of two experts and two novices. We found that the deviations of the SAR measurement by the experts were fairly better than those by the novices.

**ACKNOWLEDGEMENT**

We would like to thank Dr. Uebayashi and Dr. Oonishi with NTT DoCoMo and Mr. Takabe, Mr. Seo, and Mr. Aikyo with TELEC for their support in the SAR measurement and Mr. Sato, Mr. Asou, Mr. Miyota, and Mr. Kurokawa with NTT-AT Co., for their support in the SAR calibration.

**REFERENCES**

[1] IEC 62209-1, Human exposure to radio frequency fields from hand-held and body-mounted wireless communication devices ---Human models, instrumentation, and procedures---, Part1: Procedure to determine the specific absorption rate (SAR) for hand-held devices used in close proximity to the ear (frequency range of 300 MHz to 3 GHz), 2005.

[2] IEEE Std 1528-2003, IEEE Recommended Practice for Determining the Peak Spatial-Average Specific Absorption Rate (SAR) in the Human Head from Wireless Communication Devices: Measurement Techniques, 2003.

[3] S. Watanabe, et al., “A study on frequency characteristics of SAR-probe calibration for RF safety compliance,” Proceedings of ISAP, Vol.2, pp.885—888, Seoul, 2005.

[4] S. Watanabe, et al., “Uncertainties of SAR-probe calibration and of SAR measurement for compliance tests of cellular phones,” Proceedings of EMC’04/Sendai, pp.557—560, Sendai, 2004.