Potential Usability of Allocated but Unused Spectrum in the United States of America

Allen Petrin[(1)], **Paul G. Steffes**[(2)]

[(1)] Georgia Institute of Technology, 324341 GA Tech Station, Atlanta, GA, USA, 30332-1005, me@allenpetrin.com
[(2)] As (1) above, School of Electrical and Computer Engineering, 777 Atlantic Dr., Atlanta, GA, USA, 30332-0250, ps11@prism.gatech.edu

ABSTRACT

The increasing demand for radio spectrum necessitates a reassessment of how it is allocated for use. This paper discusses a novel method of utilizing assigned but unlicensed spectrum (float spectrum) to provide high-speed communications, with particular application to rural areas. This method: Interference Generation Mitigation™ attempts to minimize any impact to existing spectrum users.

INTRODUCTION AND BACKGROUND

In the United States, the Federal Communications Commission (FCC) is responsible for controlling commercial use of spectrum and the National Telecommunications and Information Administration (NTIA) has this responsibility for the government's use of spectrum. Currently the FCC assigns blocks of frequencies for a specific type of use in bands and then licenses a part of these bands to users as channels. By being licensed, one is guaranteed the exclusive right to a channel in a geographic region. The owner also has obligations placed on them by the FCC, both technical and policy-based.

There is also additional spectrum that is declared unlicensed. Compared to licensed spectrum, it generally has lower quality of service (QoS) and higher user obligations [1]. The user is not guaranteed exclusive use, and confining limits are placed on transmission power, transmission method, and usage etiquette [2]. In reality very little spectrum is unlicensed, but the amount in this category has significantly increased. Until recently the only unlicensed spectrum used for advanced telecommunications was the 2.4 GHz Industrial, Scientific, and Medical (ISM) band, but now there is the Unlicensed National Information Infrastructure (UNII) which is a 300 MHz noncontiguous band between 5.15 GHz and 5.825 GHz, the Unlicensed Personal Communications Service (UPCS) which offers 30 MHz of bandwidth, and the 59-64 GHz Millimeter Wave band [2,3]. These new unlicensed bands have different QoS and obligations (not necessarily higher or more lenient), but they do have the distinct disadvantage of requiring higher frequency equipment. Because of this, nearly all users (i.e. HomeRF, 802.11b, BlueTooth, Ricochet, RoofTop) of these unlicensed bands currently operate in the 2.4 GHz ISM band [4,5,6]. It is evident that the 2.4 GHz ISM will soon be saturated with users, even when employing the most advanced digital signal processing techniques [1].

Current users of the licensed and unlicensed band have significantly different needs. Licensed broadcast media and telecommunications represent the traditional users of spectrum. They require permanent channel assignment and low interference to best serve their customers. Unlicensed users are currently confined to wireless local area computer networks or pico area networks. These users require universal geographic access to spectrum without previously being granted a license to use it. Reduction in quality of service is a compromise they accept since there are few alternatives and usage is of a convenience nature (rarely mission critical).

In general, the banding of frequencies for licensed and unlicensed channels allows for standardized media and telecommunications uses. This allows for TV, radio, terrestrial microwave, terrestrial cellular, satellite communications, radio navigation and wireless networks to have fixed frequency ranges, regardless of locality. The main benefit of this is lower cost equipment and interoperability [1].

FLOAT SPECTRUM DEFINED

It is important to understand that even though spectrum *bands* are assigned, often not all the *channels* in the band are licensed. Even in a major television market in the U.S., no viewer will find all channels 2 thru 69 active. This is not only because there are too few prospective licensees, but also to maintain a separation distance between stations operating on the same channel. The same is true for other spectrum bands. Portions of the spectrum where there are no operating licensees constitutes float spectrum. An example of this is beyond the grade B reception contour of a TV

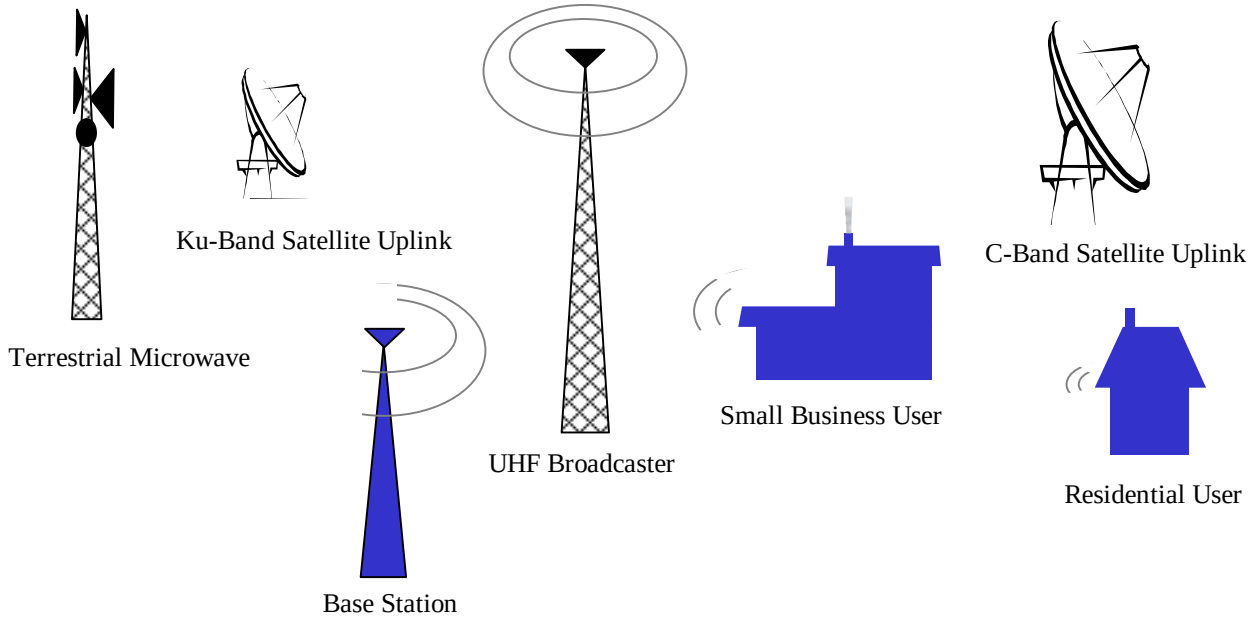

Fig.1 Spectrum Operation Environment

station; thus float spectrum includes not only unlicensed spectrum but also the buffer zones. An analogy to spectrum float is the money float at a bank: when a bank removes money from one account and places it in another, there is a short transfer time. For a large bank this continuous money in flux is quite significant and a source of money to loan out.

Considerable float does exist. Reports by the U.S. Dept. of Commerce show significant unused spectrum in urban areas, and in rural areas a dearth of spectrum users [7,8]. A method could be devised to provide the float on a temporary basis to users while having no negative externalities to current or future licensees. In the past, hardware limitations would have made exploitation of float spectrum quite difficult, but broadband radios which can use this scattering of frequencies have been recently demonstrated, including software-based radios which can tune from 2 MHz to 2 GHz [9,10,11].

From a system provider standpoint float will offer QoS and obligations somewhere between the unlicensed and licensed spectra. Authority to use float spectrum will be granted by the FCC in a manner similar to the licensing process. This permit will provide the use of float spectrum with significant bandwidth, maximum emitted power and usage dwell times to fit the needs of a large percentage of current users of spectrum who are sub-optimally serviced by the current system.

IMPLEMENTATION METHOD

In using float spectrum the paramount goal is to be imperceptible to the licensed users. One approach to this a thoroughly conceived spectrum management system is the Interference Generation Mitigation™ (IGM™) model, described below.

Figure 1 presents the typical operational environment that a wireless terrestrial communication system using float spectrum would encounter. Present licensees emit power at varying frequencies in many possible directions over spatially-varying terrain and through an atmosphere that alters the propagation of the radio waves. In addition to this, the environment varies over time: transmitters are turned on and off, the ionosphere's charge density changes over the course of the day (this is why AM radio station must reduce their transmit power at night), and the geographical terrain gets modified by man and nature (leaves fall, and buildings are constructed) [12]. A 'low tier' approach is used which takes all these parameters into account.

Figure 2 illustrates the block diagram for Customer Premises Equipment (CPE) to be used by this system. This device, in combination with a base station mounted on a tower, would comprise the IGM™ system. When the CPE is first activated, it would determine its geographic location by using the Global Positioning System (GPS); this also allows the

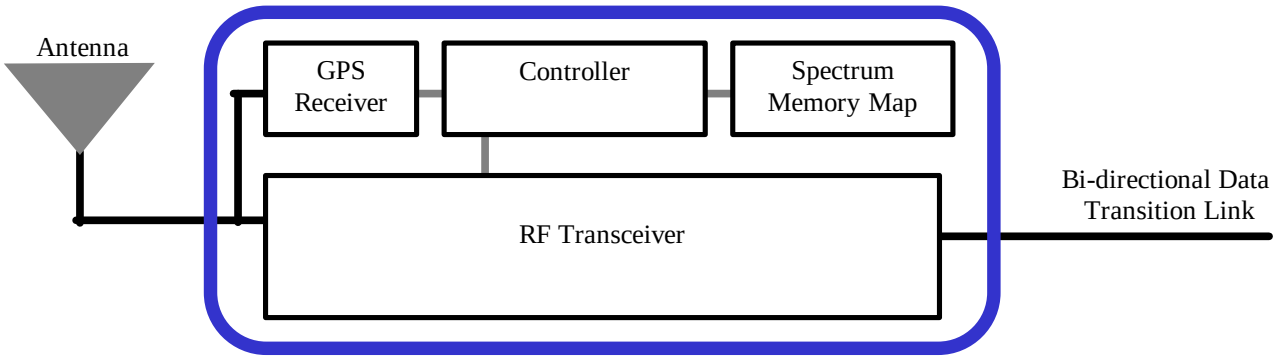

Fig. 2 Customer Premises Equipment Block Diagram

CPE to know the precise time (useful for the transmission method). Next the CPE will sweep the range of potential operating frequencies, measuring the power flux density (PFD) a common unit that corresponds to radio field power. The data from this spectrum survey is used to determine frequencies that are unused. Subsequently the CPE will look for the control channel from a base station. When this channel is found, the CPE will combine the results of its spectrum search with a list of available channels broadcast by the base station to find a channel that both it and the base station have approved for use. With a communication channel now selected, the CPE will send its location and spectrum survey data to the base station. The base station then takes the data from this CPE and the other CPE's operating in the area along with spectrum surveys it has performed, knowledge of the limitations of the detecting equipment, a terrestrial map of the area, past spectral knowledge of that area, known licensees in that area, and an up-to-date knowledge of transmitting restrictions so as to assign the CPE frequencies and transmitting method that will cause no perceivable interference to licensed users.

Figure 3 shows an example one of the tools that the base station can use to prevent disturbing licensed users. The mask in this figure shows the conservatively set maximum PFD levels, above which harmful interference to the licensed user in the locality of the base station could occur. When the PFD emitted by the base station or CPE falls below these values, the communication is permitted.

Since spectral occupancy varies with time due to usage patterns and propagation variability, the system using float spectrum will check several times per second to see if the environment has changed, necessitating it to cease using that frequency channel to avoid creating interference. This would be done in a brief fraction of a second to prevent disrupting the licensed user.

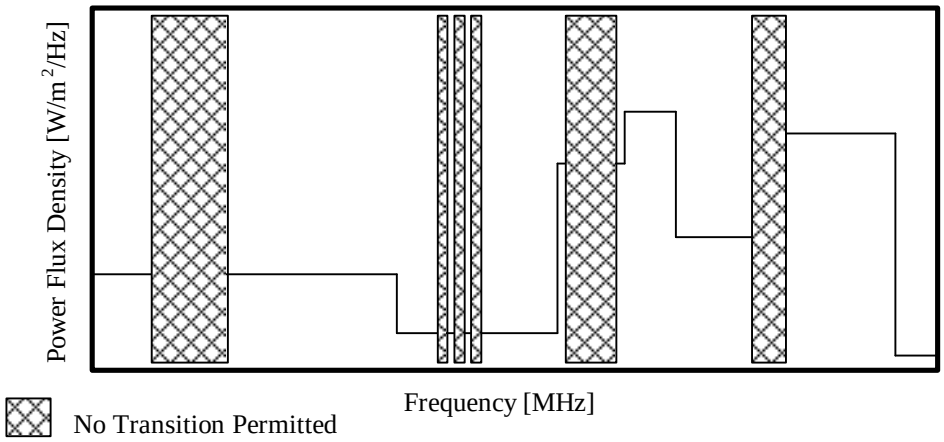

Fig. 3 Example of a Power Flux Density Mask for Operation

CONCLUSION

This paper has identified a method to increase the utility of the existing radio spectrum without perceptibly harming existing spectrum users. The talk the author will present at URSI will show the results of a 500 MHz to 6 GHz spectrum study, for several selected urban and rural locations in Georgia, USA. This study differs from previous spectrum usage studies by analyzing power flux density versus both time and azimuthal direction from several locations so as to quantify the volume of float spectrum available.

Future work by the authors will demonstration in hardware with that float spectrum can be used without causing direct harm to current licensees or to unlicensed passive users such as Radio Astronomy Services and Earth Environmental Satellite Services. This test will be conducted with low cost, broadband, software-adaptable radio equipment.

REFERENCES

[1] J. M. Peha, "Spectrum Management Policy Options," IEEE Communications Surveys, Vol. 1, No. 1, Fourth Quarter 1998.

[2] D. P. Satapathy, J. M. Peha, "Etiquette Modification for Unlicensed Spectrum: Approach and Impact," Proc. Of the IEEE Vehicular Technology Conf., Vol. 1, p. 272-276, May 1998.

[3] Takefuji, "ATM and Wireless Experiments for Remote Lectures," IEEE Communications Magazine, Vol. 37, p. 98-101, March 1999.

[4] M. J. Riezenman, "The Rebirth of Radio," IEEE Spectrum, Vol. 38, p. 62-64, January 2001.

[5] "What's Behind Ricochet: A Network Overview," http://www.ricochet.com/ricochet_advantage/tech_overview/index.html.

[6] J. M. Peha, "Wireless Communications and Coexistence for Smart Environments," IEEE Personal Communications, Vol. 7, p 66-68, October 2000.

[7] "Broadband Spectrum Survey at San Francisco, California," National Telecommunications and Information Administration, Report: 99-367, July 1999.

[8] "Survey of Rural Information Infrastructure Technologies," National Telecommunications and Information Administration, Special Publication 95-33, September 1995.

[9] S. Chuprun, "Adaptive spectrum exploitation using emerging software defined radios," IEEE Radio and Wireless Conference, RAWCON 99, p. 113-116, 1999.

[10] W. H. W. Tuttlebee, "Software-Defined Radio: Facets of a Developing Technology," IEEE Personal Communications, Vol. 6, p. 38-44, April 1999.

[11] C. Dick, "Configurable Logic for Digital Communications," Conference Record of the Thirty-Third Asilomar Conference on Signals, Systems, and Computers, Vol. 1, p. 564-568, 1999.

[12] Lucien Boithias, Radio Wave Propagation, North Oxford Academic Pub., London, 1987.