WAVE SCATTERING BY SEMI-INFINITE STRUCTURE

Leonid Lytvynenko[(1)] **, Sergey Prosvirnin**[(2)] **, Klaus Schunemann**[(3)]

[(1)] ***Institute of Radio Astronomy, Krasnoznamennaya Street, 4, Kharkov, 61002, Ukraine***
E-mail: lnl@ira.kharkov.ua

[(2)] ***As*** [(1)] ***above, but Email: prosvirnin@rian.kharkov.ua***

[(3)] ***Technical University Hamburg-Harburg, Microwave Engineering Besucheranschrift, Denickestrasse 22, Raum 1045, 21073, Hamburg, Germany, Email: schuenemann@tu-harburg.de***

ABSTRACT

A new approach to construction the theory of electromagnetic wave scattering by periodic sequences of partly transparent screens is suggested. A periodic sequence is either an infinite structure of equidistant plane screens, or a semi-infinite or finite part of such structure. The operator of reflection by a semi-infinite periodic structure is most essential in the developed theory. Periodic strip array is considered mainly as an element of multi-layered structure.

INTRODUCTION

Multi-layered periodic structures find numerous applications in microwaves techniques as filters, artificial media, and electromagnetic crystals of photonic. Since in the analysis of an electromagnetic field in the sequence of periodic screens or any other obstacles this structure can be considered as the two interacting semi-infinite sets, and the properties of the structure possessing finite number of equidistant placed screens, i.e. those of the periodic structure possessing two free-space boundaries, can be easily found, if an effective description for the field scattering by these boundaries exists, then the spectral operator of reflection R by a semi-infinite periodic structure is most essential in the developed theory. The meaning of this operator consists in its assignment to an incident field with some known (discrete or continuous) space spectrum the reflected field also possessing a discrete or continuous spectrum. In finding the operator R of reflection by a semi-infinite periodic screen sequence the specific shift symmetry of such structure is employed: the structure scattering properties never change, if one or any finite number of boundary screens has been cut out. For the known spectral operators of transmission and reflection for a single screen, being an element of semi-infinite periodic structure, the mention property of the structure symmetry allows obtaining the nonlinear operator equation for the reflection operator R.

The field incident on a semi-infinite periodic structure is shown to excite in the structure the eigen field of the corresponding infinite periodic structure. The transmission operator, which permits finding the vector of spectral amplitudes of the excited eigen field, being expressed through operator R. The eigen wave structure has been investigated and the expression for finding the propagation constant for these waves with the known operator R has been obtained. Furthermore, if the eigen wave in a semi-infinite structure is propagating towards its free-space boundary, the reflection and transmission operators for such field are also expressed through R. The operator method, accounting for the interaction of waves reflected by the free-space boundaries, was used in obtaining the reflection and transmission operators for a periodic structure of finite number of screens, these operators being also expressed through operator R. Thus, the knowledge of operator R allows obtain the completely characterization of electromagnetic properties of an infinite periodic screen sequence, as well as its semi-infinite or finite-layered parts.

MAIN EQUATIONS OF THE PROBLEM

First, let us to note that a spatially periodic structure is unconditionally infinite in the direction (for definiteness let it be the Oz –axis), where its main property is fulfilled: the structure with L –period converts itself with spatial shift $\Delta z = L$ (translation symmetry). The considered finite or semi-infinite set of screens is a structure of equidistant screens disposed along the Oz –axis but non periodic. However, for short, the term “periodic” will be applied as well to obstacles, possessing finite number of elements, with the assumption that such structures are finite part of periodic infinite sequence.

Operator of Reflection by Semi-Infinite Periodic Structure

Assume that half-space $z > 0$ is filled by the system of equidistant and identical plane periodic strip arrays shown in Fig. 1. The strips of arrays are considered infinitely thin and ideally conducting. If a plane wave incidents on the periodic structure the reflected field is the set of the fields of spatial partial waves. Their constants of propagation along the axis Oy form a countable set P. If the set of plane waves having constants of propagation along Oy from the set P incidents on the structure, the set of constants of propagation of spatial partial waves of reflected waves belong to the set P also. Thus the field reflected by semi-infinite periodic structure and a field inside this structure is convenient to describe by a general matrix of reflection and transmission. The columns of these matrixes are vectors of amplitudes of spatial partial waves. To each from these vectors are corresponded one plane wave incident on structure with the constant of propagation from the set P. Consider the transmission t and reflection r operators for a single plane strip screen as known. Let us denote R the reflection operator of semi-infinite structure. The change of a vector of amplitudes of spatial partial waves will be described using the matrix operator e if waves propagated from a strip array to neighboring one.

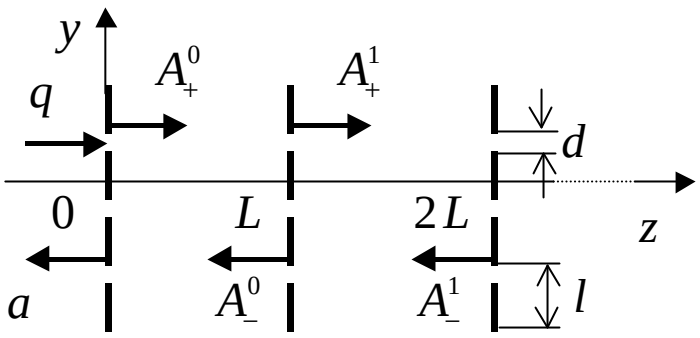

Fig. 1. Semi-infinite structure of strip periodic arrays

Consider the fields in $z < 0$ region and in the gap $0 < z < L$ numbered $j = 0$. It can be easily seen that the spectral amplitude vectors of the fields in these space regions fulfill the equations

$$\begin{aligned} A_+^0 &= tq + reA_-^0, \\ A_-^0 &= ReA_+^0, \\ a &= Rq, \\ a &= rq + teA_-^0. \end{aligned} \tag{1}$$

Exclude vectors A_+^0, A_-^0 and a from (1) and obtain the equation with respect to reflection operator R

$$\tilde{R} = \tilde{r} + \tilde{t}\tilde{R}\left(I - \tilde{r}\tilde{R}\right)^{-1}\tilde{t} \tag{2}$$

where $\tilde{R} = Re$, $\tilde{r} = re$, $\tilde{t} = te$, I is unit operator. In the general case, equation (2) can be solved by numerical method. In numerical solution the infinite matrices are truncated. Since the field of non-propagating spatial harmonics is evanescent with a distance from the array plane their contribution to the field diffracted by semi-infinite structure is negligible.

Eigen Field of Periodic Structure and Corresponding Operator of Reflection by Semi-Infinite Periodic Structure

Let us consider now an electromagnetic eigen field in the infinite periodic structure of strip arrays, possessing the same parameters as these for a semi-infinite structure. It is easy to obtain the dispersion equation for finding propagation constants b of an eigen waves

$$\det[I - \tilde{t}e^{-ibL} - \tilde{r}(I - \tilde{t}e^{ibL})^{-1}\tilde{r}] = 0. \tag{3}$$

The field of eigen wave in the each gap between arrays is a superposition of the fields of spatial partial waves propagated along Oz axis and along opposite direction. Let us denote the amplitude vectors of these partial waves as A_+^e and A_-^e correspondingly. Vectors A_+^e and A_-^e are connected the quite defined way in each of the eigen waves:

$$A_-^e = \tilde{R}_e A_+^e . \tag{4}$$

It can be derived the expression for infinite matrix $\tilde{R}_e$ in the equation (4)

$$\tilde{R}_e = \left(I - \tilde{t}\, e^{ibL}\right)^{-1} \tilde{r} \tag{5}$$

from equations with respect to amplitude vectors of eigen waves in two neighboring gaps of infinite array structure. These equations can be written by using the known operators r and t of one array.

Operator of Transmission into Semi-Infinite Structure

Let us define the operator of transmission T over the boundary of semi-infinite structure in its interior by equation

$$A_+^0 = Tq . \tag{6}$$

If it is expected known operator R one can derive from the first and the second equations of (1) the expression of T :

$$T = (I - \tilde{r}\tilde{R})^{-1} t . \tag{7}$$

Let us now consider the case when a spectrum of eigen waves exists in the periodic structure. The partial components of this complex field are determined by an amplitude vector A_+^j where j is the number of array period. The vectors of field amplitudes in neighboring gaps between arrays are in accord with equation

$$A_+^{j+1} = TeA_+^j . \tag{8}$$

If only one eigen wave propagated with number i on the one hand we can write equation

$$A_{i+}^{j+1} = \tilde{T} A_{i+}^j \tag{9}$$

on the other hand must be fulfilled the equality

$$A_{i+}^{j+1} = e^{ib_i L} A_{i+}^j . \tag{10}$$

Thus from (9) and (10) it is followed that the values $e^{ib_i L}$ are the eigen values of the operator $\tilde{T}$.

Reflection and Transmission Operators of Eigen Waves for a Boundary of Semi-Infinite Structure

Let denotes u and v are corresponded to a spectrum of incident eigen waves and reflected ones by the boundary of semi-infinite structure. The amplitude vectors of partial spatial waves are $A_\pm$ and $B_\pm$ for the spectrum u and v correspondingly in the gap between arrays nearest to boundary of structure. The amplitude vector of partial waves of transmitted field is denoted b . The transmission t and reflection r operators are defined by expressions

$$b = t\, A_+ , \tag{11}$$

$$B_- = r\, A_+ . \tag{12}$$

The amplitude vectors of partial spatial waves are in accord with equations

$$te(A_+ + B_+) = b\,, \tag{13}$$

$$A_- + B_- = re(A_+ + B_+)\,, \tag{14}$$

$$A_- = ReA_+\,, \tag{15}$$

$$B_+ = ReB_-\,. \tag{16}$$

By using (13) and (14) we can derive the transmission and reflection operator expressions

$$t = \tilde{t}\,(I + \tilde{R}r)\,, \qquad r = (I - \tilde{r}\tilde{R})^{-1}(\tilde{r} - \tilde{R})\,. \tag{17}$$

Thus, knowing the reflection operator R for an amplitude vector of the electromagnetic field, incident from free space on the boundary of a semi-infinite periodic structure, it is possible to determine operators of reflection r and transmission t for the vector of spectral amplitudes of eigen field of the periodic structure on its free-space boundary.

Transmission and Reflection Operators of Multi Layered Structure

Let us consider a multi-layered structure composed of n arrays. By using determined above operators it is not difficult to derive expressions of transmission and reflection operators of multi-layered structure

$$t_n = t\tilde{T}^{\,n-2}(I - r\tilde{T}^{\,n-2}\,r\tilde{T}^{\,n-2})^{-1}T\,, \qquad r_n = R + t\tilde{T}^{\,n-2}\,r\tilde{T}^{\,n-2}(I - r\tilde{T}^{\,n-2}\,r\tilde{T}^{\,n-2})^{-1}T\,. \tag{18}$$

NUMERICAL SOLUTION OF THE PROBLEM

Solution of the equation (2) can be found by the method of successive approximations

$$\tilde{R}^{(j+1)} = \tilde{r} + \tilde{t}\tilde{R}^{(j)}\left(I - \tilde{r}\tilde{R}^{(j)}\right)^{-1}\tilde{t}\,, \quad j = 0,1,2,... \tag{19}$$

Convergence of the method of successive approximations depends essentially from a successful choosing of initial approximation of the matrix operator. The choosing of initial approximation is of fundamental importance for numerical solution of this problem. In many cases a convergence of iterative process can be obtained from the initial approximation $\tilde{R}^{(0)} = \tilde{R}_e$.

The developed theory was used as an example in the in-depth study of diffraction properties of periodic structures of dielectric layers (loss including), those composed of partly transparent anisotropic screens being dense strip arrays (finitely-thick including), as well as structures of screens being strip arrays in a multi-wave mode; and in the study of electromagnetic field transformation on the junction of regular and diaphragm waveguides, as well as of the fields in the waveguide possessing finite number of diaphragms. The advanced approach has also allowed investigation of the diffraction properties of multi-layer sequences of two-dimension double periodic plane screens. Such structures are an effective model of photonic band gap crystals for microwaves.

CONCLUSION

Thus, this consideration outlines the formal party of the operator method for solving the problem of electromagnetic wave diffraction by multi-layer periodic structures. The operator of reflection R by semi-infinite periodic structure is shown having a fundamental character. All remaining operators can be expressed through R and through the operators, which describe the properties of one screen from their sequence. In principle, this exclusive role of spectral operator R seems absolutely natural, forasmuch as any periodic (in rigorous sense) structure of screens is always the two semi-infinite set of layers, which interact through the gap between layers. This new approach to the theory of wave scattering by layered structure was used to analyze reflection and transmission properties of number metal-dielectric periodic structures.