CHIRP WAVEFORMS FOR MULTIPLE ANTENNA CHANNEL SOUNDERS

S. Salous

Department of Electrical Engineering and Electronics
UMIST
P. O. Box 88
Manchester M60 1QD, UK
Salous@umist.ac.uk

ABSTRACT

The advantages of chirp waveforms for mobile radio multiple transmit multiple receive antenna sounders are discussed. In comparison with other waveforms, the chirp technique provides bandwidth compression without reducing the waveform repetition rate. This enables the construction of multiple parallel receive channels which can be sampled at a low rate; hence reducing the complexity of data storage. The requirements and architecture of a frequency division duplex chirp sounder designed and implemented at UMIST are described and preliminary results obtained from a single input multiple output field trials are presented.

INTRODUCTION

Wideband channel sounding waveforms can be classified in a variety of ways, which include pulse compression versus simple narrow pulse waveforms. Due to the advantages of pulse compression waveforms, which include reduced peak to average power requirements and processing gain, they have become the norm since their application to the mobile radio channel by Cox in 1972 [1]. Pulse compression techniques include the widely used method of pseudo random binary sequence (PRBS) and chirp waveforms, which are also known as frequency modulated continuous waveform (FMCW). Due to its ease of implementation, the majority of UHF mobile radio channel sounders continue to use the PRBS technique with either analogue bandwidth compression using a sliding time cross correlator (STCC) or digitally using high speed analgue to digital converters. While the STCC enables the use of low speed analogue to digital converters, this is achieved at the expense of a reduced waveform repetition rate resulting in a lower sampling rate of the channel and hence a lower Doppler coverage.

The advantages of using chirp waveforms have long been recognised in HF radar and sounders [2]. Their application to mobile radio channels was limited to the indoor environment where a network analyser is used to generate the transmitted linear frequency sweep and to detect it. While the technique enables the generation of a wideband signal which is appropriate for high range resolution in indoor environments, it is limited in range due to the need to use the same equipment for transmission and reception.

The limitations of the network analyser can be avoided using digital generation techniques, which can use either a read access memory (RAM) device to store the samples of the waveform or direct digital frequency synthesisers (DDFS). While the former is suitable for short duration waveforms, the DDFS technique provides more flexibility in programming the parameters of the waveform and also enables the generation of the chirp signal at a suitable intermediate frequency for upconversion. When the chirp waveform is used in conjunction with a heterodyne detector, the bandwidth of the detected chirp signal is compressed without the corresponding reduction in the sampling rate of the channel [2]. The technique also permits the flexible processing of the acquired data with different time and frequency resolutions since the signal is compressed in bandwidth but not in time. This property is particularly useful in the analysis of the channel impulse response as a function of frequency [3].

The RAM technique can be extended to various other waveforms, such as that used in the RUSK sounder [4] and more recently in the AMERICC sounder developed by France Telecommunication [5]. In the 120 MHz bandwidth version of the RUSK sounder, the waveform repetition rate is programmable from 0.8 to 25.6 μs in multiples of power of two. In the AMERICC sounder, bandwidths up to 250 MHz can be generated with 512 ns to 512 μs duration. Both generate a waveform with a flat spectrum and constant envelope.

Recently, multiple antenna sounders have become widely used for a number of applications. These include estimation of the direction of arrival and direction of departure, and for the estimation of channel characteristics for multiple input multiple output (MIMO) systems. To avoid the cost and complexity of the multiple channel receiver, multiple receive antenna measurements use a single receive channel with a multiplexing switch to scan the different antennas sequentially [4-7]. These sounders tend to employ short pulses in order to complete the scanning of the antenna array within the coherent time of the channel. Alternatively, a multiple channel receiver with bandwidth compression using a digital chirp sounder with heterodyne detection for bandwidth compression can be used. This approach is used in the eight-channel sounder recently implemented at UMIST [8].

The paper discusses the requirements of multiple antenna sounding, and presents preliminary measurements from the UMIST sounder.

MULTIPLE ANTENNA SOUNDING REQUIREMENTS

The main channel sounding requirements are determined by the time delay resolution, which determines the transmitted bandwidth and the maximum expected Doppler shift which sets the waveform repetition frequency (WRF). For MIMO channel sounders, these basic requirements are not changed. The bandwidth of the measurements is usually 300 MHz for indoor measurements or a few tens of MHz for outdoor environments (60 MHz for third generation systems). The WRF depends on the carrier frequency and the environment, with a usual sampling distance every $\lambda/3$. At 2 GHz operating frequency and for measurements in urban environments, the maximum expected Doppler shift can be accommodated within 100 Hz for pedestrian users and 250 Hz for vehicular users (maximum vehicular speeds of 42 miles/hr). The WRF also determines the maximum time delay window that can be detected without ambiguity. For indoor environments this is only on the order of a few hundred ns while in outdoor measurements this can extend up to 40 μs in city centres with high rise buildings or suburban areas with hilly terrain [9]. Since the effective time delay window decreases as the receiver moves away from the transmitter, the waveform duration should contain a guard time which depends on the maximum range covered in the measurements to avoid ambiguity.

To realise SIMO/MIMO measurements there are two possible architectures. The first uses the same single transmit (input) single receive (output) (SISO) sounder architecture with switching between antennas at the transmitter and at the receiver. To enable Doppler measurement the scanning of all antennas should be completed within the coherent time of the channel. For the 2 GHz band and an 8 by 8 MIMO system, the required WRF is 64 times that for a SISO sounder. This number is usually doubled to 128 to permit for switching transients to die out. For 100-250 Hz Doppler coverage this corresponds to waveform duration between 78- 31 μs, respectively. While the lower limit permits the use of a waveform with adequate time delay window, the shorter limit does not enable the detection of long delayed echoes.

Switching at the receiver can be avoided with an architecture, which employs parallel channels at the receiver. For eight parallel channels SIMO measurements can still be carried out with the same WRF as for SISO systems. For MIMO measurements the WRF is increased by the number of transmit antennas. For the example of eight antennas this corresponds to 800 Hz-2000 Hz which still gives adequate range coverage.

The above requirements cannot be satisfied with the STCC since for bandwidth compression, the effective waveform repetition rate is reduced by the sliding factor. For a 31 μs time delay window, 8 by 8 MIMO, the WRF is 0.05 Hz for a 5000 sliding factor. For the SIMO measurements reported by [10] with 8-receive antennas, the effective Doppler coverage was only 23.86 Hz for a time delay window of 640 ns.

UMIST MULTIPLE RECEIVE CHIRP SOUNDER

To avoid the limitations of the SISO architecture when applied to SIMO/MIMO measurements, the dual frequency band chirp channel sounder designed and implemented at UMIST [11] has recently been upgraded to eight parallel channels at the receiver (see Fig.1). The receiver is based on the heterodyne detector, which uses a replica of the transmitted chirp signal to compress the bandwidth. The output of each mixer is filtered with a lowpass filter whose cutoff frequency depends on the chirp parameters (bandwidth and duration) and the maximum expected time delay window, amplified, digitised and stored first on a 128 Mbyte RAM whose contents are then transferred to the hard disk. For example for SIMO measurements with 60 MHz bandwidth, 100-250 Hz WRF, and 40 μs time delay window, the bandwidth is compressed to 240-600 kHz which requires a total data acquisition rate of 1.92-4.8 MHz sampling rate. For MIMO measurements this rate needs to be multiplied by the number of transmit antennas, which is still a much lower rate than the 320 Msps or the 1 Gsps required by the RUSK sounder or the AMERRIC sounder, respectively.

To continue measurements at the two UMTS frequency division duplex (FDD) bands, the transmitter and receiver generate both bands simultaneously. At the receiver, the two bands are switched every sweep where each band can be received on all the eight channels. It is however possible to reconfigure the sounder for four channels for the uplink and four channels for the downlink for other antenna configurations.

In contrast to sounders with short duration waveforms, which discard every other waveform to permit the RF switch to settle, every sweep can be used in the heterodyne chirp detector. This is due to the fact that the first section of the sweep is not used in the processing, hence the switching does not affect the received signal.

The back to back performance of one of the channels is shown in Fig. 2. Fig. 2.a displays the time delay resolution and Fig.2.b shows the ambiguity function which gives both the time delay and Doppler shift resolutions. From the figure, it can be seen that the dynamic range of the sounder is better than 50 dB for power delay profile measurements and 45 dB for the scattering function. The sounder was used in conjunction with six directional antennas each with a 3-dB width equal to 60°. Fig. 3 displays a measurement in the city centre of Manchester for both frequency bands where the transmitter was placed on top of an eight storey building at 46 m, and the receiver was mounted on a trolley in the backyard of the building with antenna height at 1.9 m. The figure shows that echoes up to 13 μs were detected even in the vicinity of the transmitter.

CONCLUSION

The paper discussed the different architectures of multiple antenna channel sounders and the relative merits of the chirp technique with heterodyne detection were highlighted. The advantage of bandwidth compression, which permits low sampling rates, is seen essential to the construction of a multi-channel receiver architecture. The architecture of the multiple channel sounder designed and implemented at UMIST was briefly described. Preliminary measurements carried out with the sounder using six sectored antennas were also presented.

ACKNOWLEDGEMENTS

The author would like to thank the following colleagues from the Department of Electrical Engineering and Electronics at UMIST who contributed to the realisation of the sounder and to the field trails: Mr. P. Fillipides, Dr. I. Hawkins, Mr. R. Lewenz, Mr. M. Abdullah, Mr. V. Hinostroza and members of the Mechanical Workshop.

REFERENCES

[1] C. D. Cox, "Delay Doppler characteristics of multipath propagation at 910 MHz in a suburban mobile radio environment", *IEEE Trans.Ant. & Prop.*, 1972, AP-20, (5), pp. 625-635.

[2] S. Salous, "FMCW channel sounder with digital processing for measuring the coherence of wideband HF radio links", *Proc. IEE*, 1986, 133, (5), pp. 456-462.

[3] S. Salous, "Measurements of multipath delay statistics over 72-90 MHz bandwidth at 1.8 GHz in two European cities using a chirp sounder", *Radio Science*, vol. 34, No. 4, July-August, 1999, pp 797-816.

[4] W. Wirnitzer, D. Bruckner, R. S. Thoma, G. Sommerkorn, and D. Hampicke, "Broadband vector channel sounder for MIMO channel measurement", *IEE seminar on MIMO: Communication systems from concept to implementation*, 12 Dec. 2001.

[5] J-M. Conrat, J-Y Thiriet, and P. Pajusco, "AMERICC, l'ouile de mesure du canal large bande radioelectrique developpe par France Telecom R&D", *Fourth Journees d'etudes on Propgation Electromagnetique dans L'atmosphere du Decametrique a L'angstrom*, Rennes, France, March 2002.

[6] P. H. Lehne, F. Aanvik, J. C. Bic, P. Pajusco, M. Grigat, I. Gaspard, and U. Martin, "Calibration of mobile radio channel sounders", *COST 259 TD (98)*, Sept. 23-25, 1998.

[7] M. Beach, D. McNamara, and P. Karlsson, "Development of a channel measurement system for multiple-input multiple-output (MIMO) applications", IST Mobile Summit, 2000, pp 497-501.

[8] S. Salous, P. Fillipides, and I. Hawkins, " A multi-channel sounder architecture for spatial and MIMO characterisation of the mobile radio channel", *IEE seminar on MIMO: Communication systems from concept to implementation*, 12 Dec. 2001.

[9] S. Salous, "W-CDMA measurements for 3G Systems", *Fourth Journees d'etudes on Propgation Electromagnetique dans L'atmosphere du Decametrique a L'angstrom*, Rennes, France, March 2002.

[10] C. Le Meins, C. Godefroy, A. Bourdillon, and P. Coston, "Development d'un sondeur multi-capteur pour l'analyse du canal de propagation UMTS-Caracterisation des angles d'arrivee des multi-trajets", dito.
[11] S. Salous, H. Gokalp, “Dual frequency sounder for UMTS frequency division duplex channels, in press in the IEE Proceedings Communications.

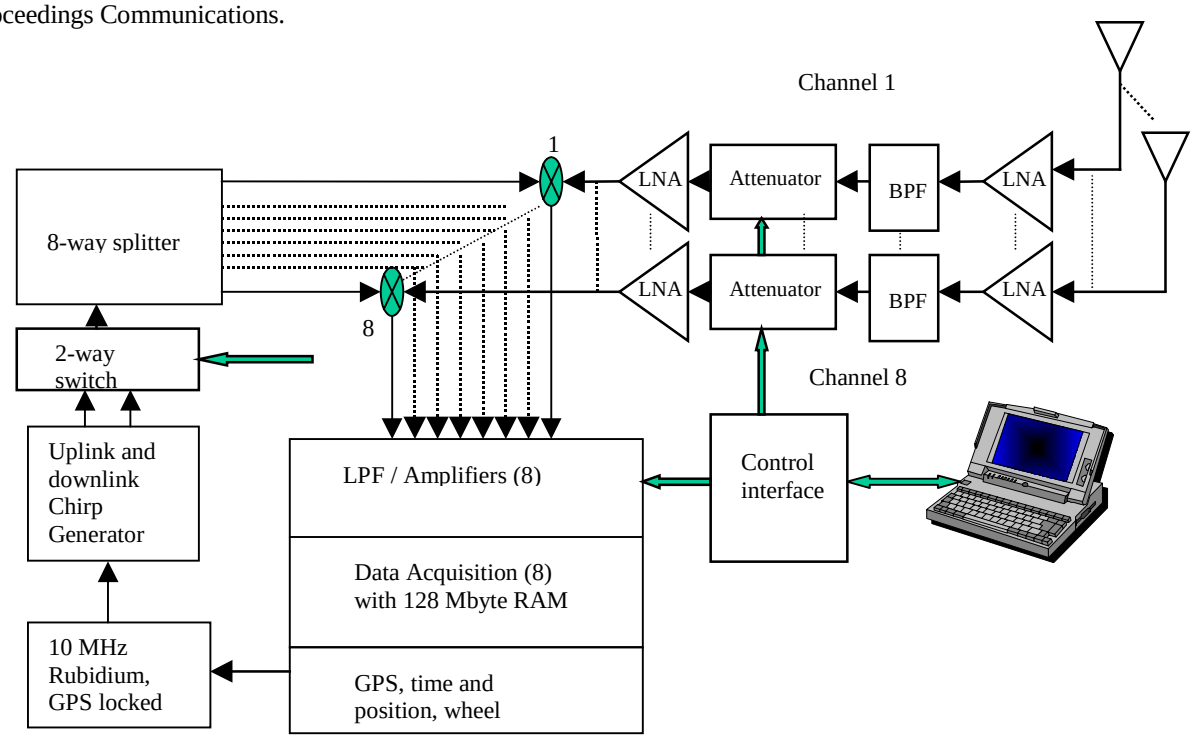

Fig. 1. Architecture of multiple receiver of the UMIST channel sounder

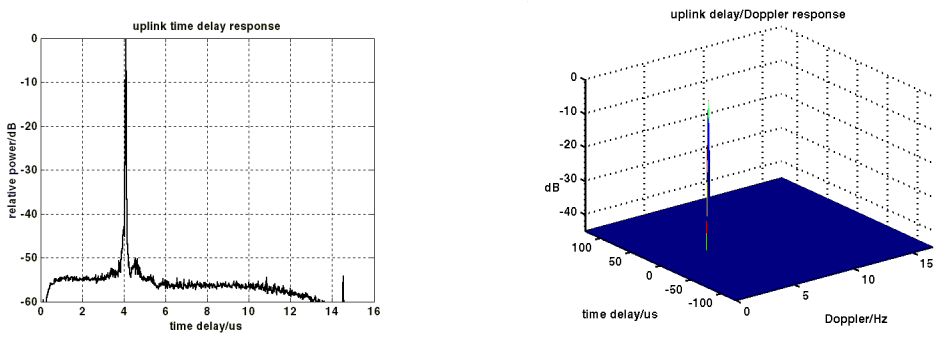

(a) **(b)**

Fig. 2. Back to back test of one of the channels (a) time delay, (b) ambiguity function.

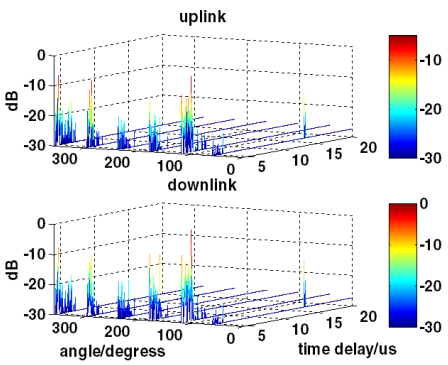

Fig. 3. Measurement with six directive antennas for the uplink and downlink.