URSI - RCRS 2022, IIT (Indore), India, 1 - 4 December, 2022

Comparative Analysis of FPGA based Systems and Indigenously developed Analog System for Frequency Stabilization of Lasers in NPLI-CsF1

Navraj Poudel *(1, 2), Suchi Yadav(1), Manoj Das(1, 2), Aniket Gupta(1), Amitava Sen Gupta(3) and Poonam Arora(1, 2)
(1) CSIR-National Physical Laboratory, Dr. K. S. Krishnan Marg, New Delhi 110012, India, https://www.nplindia.org
(2) Academy of Scientific and Innovative Research, Kamla Nagar, Ghaziabad, Uttar Pradesh 201002, India
(3) The NorthCap University, HUDA Sector 23-A, Gurugram 122017, India

Abstract

Lasers and their stabilization to a particular hyper-fine transition of Cs-133 atoms is the back bone of the primary frequency standard (Cs fountain clocks). In CSIR-NPL we have indigenously developed primary frequency standard known as NPLI-CsF1 [1]. For the laser cooling of Cs atoms, ultra-stable laser frequency is required. A compact all-in-one laser frequency stabilization system has been designed which serves multiple objectives as it generates a square wave for modulating the laser current, provides lock-in amplification, enables us to monitor the derivative curve, to control the gain of system, and to produce and monitor the servo-control signal for providing feedback. This cost-effective and customizable analog locking system provide top-of-fringe locking with a phase-sensitive error signal corresponding to the Saturation Absorption Spectroscopy peaks of Cesium (Cs)-133 D2 line, which is fed back to the piezo of the laser for its frequency stabilization. The system provides stable frequency locking of laser for days at a stretch. Characterization and comparison of the circuit with FPGA based lock-in device has also been performed.

1. Introduction

Cs fountain frequency standard provide the most precise and accurate measurement of SI unit of time [2]. In a fountain clock, Cs atoms are laser cooled with six orthogonal laser beams. Atoms are cooled to the order of few µK. In order to achieve such order of cooling, highly stable lasers are required which are locked to a particular hyper-fine transition peaks of Cs D2 line.

We present an efficient locking technique in which the laser is locked to a reference atomic transition peak with the help of an indigenously developed electronic locking circuit. The Doppler-free transition peaks are produced using SAS of Cs atoms and the laser is then locked on to one of these peaks. This paper unveils the experimental results of an efficient analog electronic locking circuit for top-of-fringe frequency locking of an ECDL to one of the Doppler-free saturation absorption peaks of the Cs-D2 line at 852 nm. The locking circuit generates a phase-sensitive error signal that is fed back to the piezo head of the laser for its frequency correction. The circuit is very compact in size, lightweight, easy to operate, customizable according to different needs, consistent in performance and cost-effective.

A commercially available, FPGA based system on chip (SOC) device is used as digital lock-in device [3]. M. A. Luda et al. have designed a toolkit and demonstrated laser frequency stabilization [4, 5]. We have used the similar technique for our digital lock-in purpose. The complete characterization and comparison of both the analogue and FPGA based lock-in device is presented in this paper.

2. Locking Scheme and circuit

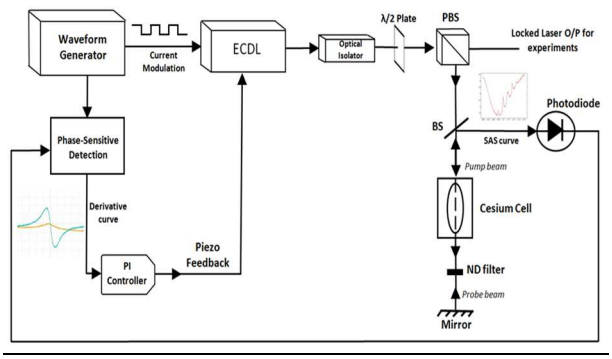

Figure 1. Laser locking scheme.

A square wave of 80kHz frequency is generated using an astable multivibrator. This square wave is passed through two monoshots and a J-K flip-flop to produce the modulation frequency of 40kHz. One part of this modulation is fed to the laser for its input current modulation and another part is applied to the lock-in amplifier as the reference signal. AD630 IC is the preferred for this purpose. The lock-in multiplies the reference signal and the detector signal and the output is passed through a passive LPF. The passive LPF used has a cut-off frequency of 154Hz. A servo-controller is used to produce a correction signal corresponding to the error signal. A servo-loop usually consists of a Proportional-Integral-Derivative (PID) controller (figure 1). In our system, we use diode lasers that respond swiftly to the frequency adjustments, preventing the need of the derivative term in

our experiment. So we have used just the PI-controller to produce the error signal. The final correction signal is then fed back to the laser for its frequency stabilization

3. FPGA based digital locking circuit

FPGA based digital lock-in toolkit comes with an oscilloscope, harmonic lock-in, PID and re-lock mechanism.

We have made use of the harmonic lock-in facility with modulation frequency of 50KHz. There are two input channels and two output channels. The toolkit doesn't come with the digital high pass filter (HPF), hence an analogue active HPF was designed and interfaced at one of the inputs to filter out the DC component of the input SAS signal. The signal is then passed through digital low pass filter (LPF) for demodulation and the error signal generated is fed to PID controller in order to complete the feedback loop.

4. Saturated Absorption Spectra of Cs D2 line

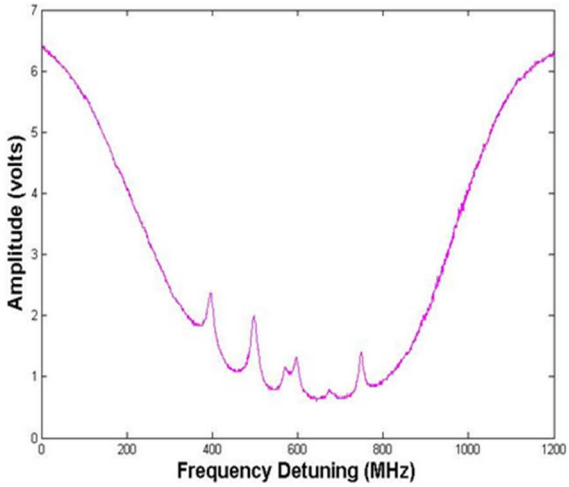

Figure 2. Cs D2 line 3-F' allowed transitions from $6^2S_{1/2}$ state to $6^2P_{3/2}$ state.

By sweeping the laser temperature, laser current and piezo voltage with the help of the laser controller, we can scan the laser frequency through D2 line of Cs and one could observe sharp peaks of Doppler-free spectrum. The Cs atom in ground state $6^2S_{1/2}$ can make transition to any three hyperfine states (F=3,4,5) of the excited state $6^2P_{3/2}$. So, we observe three absorption peaks along with three cross-over resonances. The figure 2 shows six absorption peaks obtained for 3-F' transitions of Cs D2 line. Similarly, figure 3 shows the six absorption peaks obtained for 4-F' transitions.

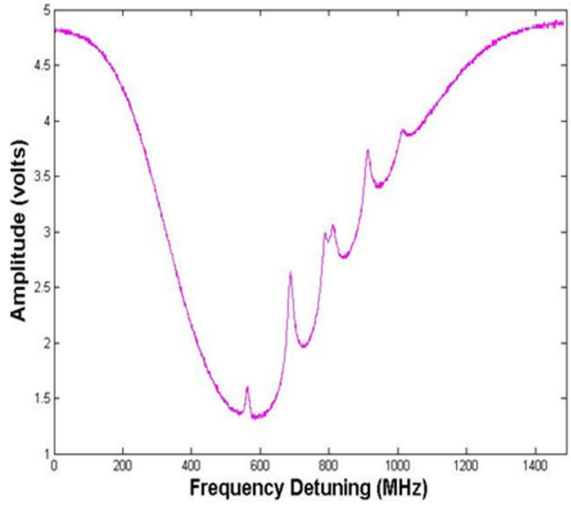

Figure 3. Cs D2 line 4-F' allowed transitions from $6^2S_{1/2}$ state to $6^2P_{3/2}$ state.

5. Results and Conclusions

The error signal produced corresponding to the 3-F' transitions of the 133-Cs atom using the electronic locking circuit is illustrated in figure 3. The upper curve (in red) shows the SAS peaks corresponding to 3-4' transition and the below curve (in green) shows its derivative curve. To lock the laser to the first peak (figure 4) i.e. the 3-4' transition peak of Cs D2 line (we have locked the laser to 3-4' peak as per our requirement for our experiment but it can be locked to any other peak also), the scan amplitude of the laser is gradually reduced and the scan voltage is set accordingly so as to zoom on to the first peak of Cs D2 line. The lock switch is turned on to complete the servo loop and correction is applied to the laser for stabilizing its frequency.

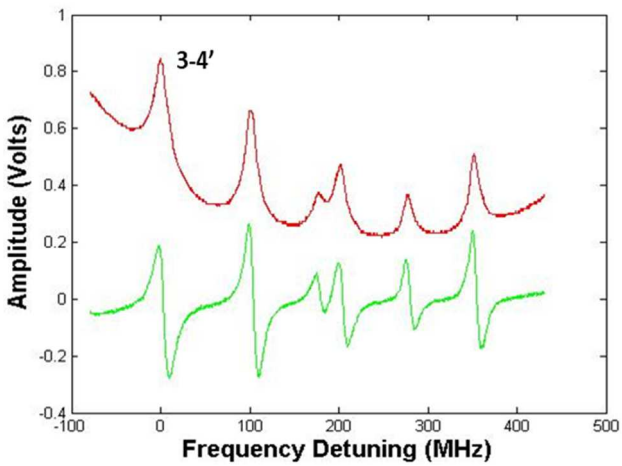

Figure 4. (Red) Cesium-D2 line 3-F' transitions from $6^2S_{1/2}$ state to $6^2P_{3/2}$ state. (Green) Corresponding error signal obtained using the locking circuit.

The detailed experimental analysis will be presented in this paper. The characterization of the analogue locking circuit and its comparison, advantages and disadvantages will be discussed.

7. References

1. A. Acharya, V. Bharath, P. Arora, S. Yadav, A. Agarwal, and A. S. Gupta, "Systematic uncertainty evaluation of the cesium fountain primary frequency standard at NPL India," *Mapan*, **32**, 4, March 2017, pp. 67-76, doi.org/10.1007/s12647-016-0190-4.

2. P. Arora, S. B. Purnapatra, A. Acharya, A. Agarwal, S. Yadav, K. Pant, and A. S. Gupta, "NPLI Cesium Atomic Fountain Frequency Standard: Preliminary Results," *IEEE Transactions on Instrumentation and Measurement*, **62**, 7, July 2013, pp. 2037-2042, doi: 10.1109/TIM.2013.2255974.

3. https://www.redpitaya.com/f130/STEMlab-board.

4. M. A. Luda, M. Drechsler, C. T. Schmiegelow, and J. Codnia, "Compact embedded device for lock-in measurements and experiment active control," *Review of Scientific Instruments*, **90**, 2, February 2019, pp. 023106, doi.org/10.1063/1.5080345.

5. https://github.com/marceluda/rp_lockin_pid.