URSI - RCRS 2022, IIT (Indore), India, 1 - 4 December, 2022

Experimental Studies on the Impact of Chassis Voltage on a GNSS Receiver Embedded Navigation Computer, Results and Design Improvements

Biju VS * (1), Vinoj VS (1), Anand Shankar O T (1), Mohammed Basim A (1), Radhakrishna Pillai C (1) and Sasikumar S (1)
(1) ISRO Inertial Systems Unit, Trivandrum, Kerala, India-695013

Abstract

Global Navigation Satellite System (GNSS) receivers are a suitable candidate for aiding the performance of a low cost IMU for launch vehicle which injects satellites to Low Earth Orbit (LEO). The GNSS receiver can be embedded into the navigation processor itself for reducing size, weight and cost. The navigation computer in a launch vehicle, being a mission critical element is generally designed with special care w.r.t its grounding scheme, isolation techniques and quality standards. The incorporation of a GNSS receiver into the navigation computer calls for major design changes. Being an RF circuit, the signal ground of a GNSS receiver should be connected to chassis of the launch vehicle. This contradicts the normal notion of ground isolation with chassis followed in navigation computers. A GNSS embed Navigation Processor (GNP) board which houses a Navigation processor and a NavIC/GPS receiver is developed for launch vehicle applications. In view of the change in grounding philosophy, the GNP board is subjected different tests to simulate the chassis potential rise scenarios commonly seen in a launch vehicle. Different conditions like inadvertent chassis voltage during stage separation, instruments converter shorting to chassis, pyro or valve battery live shorting to chassis and pyro or valve battery live shorting to return are simulated. The tests results are critically analyzed and some design improvements are implemented to make GNP more robust to chassis voltages.

1. Introduction

Phenomenal changes are happening in the area of launch vehicle development in recent years. Due to the potential business scope of applications based on small and medium sized satellites, many new approaches are taken to make the launch vehicle more cost effective. An inertial navigation system is a vital part of all present launch vehicles. Normally, navigation grade gyros and accelerometers are used to achieve the stringent mission requirements on the navigation system. GNSS is another area that has seen drastic developments in the last couple of decades. GNSS receivers are capable of providing very precise position and velocity information [1]. Usage of GNSS receivers for closed loop navigation was not followed in launch vehicles for many years owing to its lack of autonomy and possibility of jamming. However, GNSS receivers are continuously used in many applications nowadays and launch vehicle development is becoming more of a business prospect than strategic one. The navigation system in a launch vehicle is reconsidered in this regard. Present advancements in the area of Micro Electro Mechanical Systems (MEMS) sensors has open up a new doorway for smaller and cheaper inertial navigation systems. The output of these inertial navigation systems can be aided using output from a GNSS receiver. Kalman filter based fusing algorithms are generally used for fusing INS output and GNSS output by retaining positive aspects of both outputs. A navigation system generally consists of a mechanical structure called cluster which houses the sensors and sensor electronics and a navigation processor board. Here, a navigation processor board is designed with embedded NavIC/GPS receiver [2,3]. Two GNSS antennas are mounted on opposite sides of the launch vehicle for better visibility of satellites. The outputs of the antennas are fed to Low Noise Amplifiers (LNA) and outputs from two LNAs are combined using a power combiner. The navigation processor gives its output through MIL STD 1553B bus to the mission computer. A block diagram of the system is given in Figure-1.

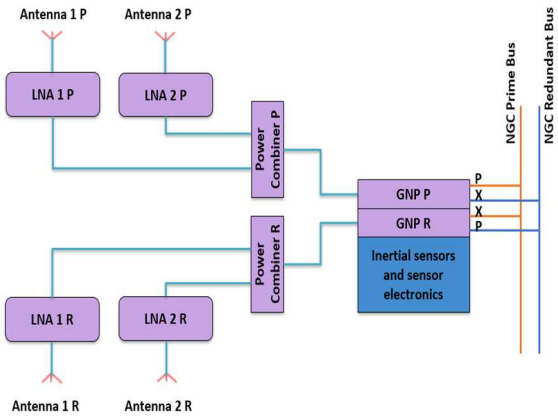

Figure 1. GNSS Receiver embedded Navigation System Configuration.

2. Grounding Scheme of GNP

The two processors within GNP are named Navigation Processor and GNSS processor. Two processors

communicate with each other using a custom designed Inter Processor Communication (IPC) protocol implemented using FIFO memory. Digital section contains Navigation processor, GNSS processor and two FPGAs. Navigation processor in GNP performs functions like inertial and aided navigation software, sensor data acquisition, IPC with GNSS processor and handling external reset and processor mode switching. GNSS processor in GNP performs functions like signal acquisition, tracking and solutions computation. FPGA-1 performs the satellite signal correlation functions and FPGA-2 does the communication interface related functions. The board is having UART and MIL STD 1553B interface with external world. The GNP board also houses an RF front end circuitry for processing the GNSS RF signal. The RF front end circuit is based on a mixed signal ASIC. It has both RF sections as well as digital section. RF front end circuit down converts satellite signals to intermediate frequency and digitizes it.

The RF ground should be connected to chassis of the vehicle for better performance. This is a common design practice followed in all RF packages. Due to the nature of signals being given from RF front end circuit to digital section, the design necessitates that the ground of RF front end circuit be connected to ground of digital circuit. Also, since RF front end ASIC is a mixed signal ASIC with digital and RF sections, there is no scope for a segregation between the digital ground and RF ground. Hence the common signal ground of GNP is connected to package chassis which in turn is connected to launch vehicle chassis. Grounding of GNP ground to package chassis is implemented through annular ground pads at mounting screw locations. In addition to GNP, ground of all other RF elements is also connected to vehicle chassis. LNA circuit ground is connected to chassis through RF SMA connectors. In power combiner and antenna, circuit ground is connected to chassis through RF SMA connectors. Being passive devices, there are no power inputs to these devices. RF coaxial cable connections between the RF subsystems and GNP also give electrical continuity between circuit grounds of different RF subsystems and GNP. A block diagram of the grounding scheme of GNP is given in Figure-2.

3. Test Cases and Results

Different experiments are done to simulate a variety of chassis voltage conditions seen in a launch vehicle. The test setup configuration and test details are given in following subsections.

3.1. Overall Grounding Scheme of Launch Vehicle

For simulating the effects of chassis induced voltages in GNP performance, the overall grounding scheme in a launch vehicle is considered and a simplified configuration

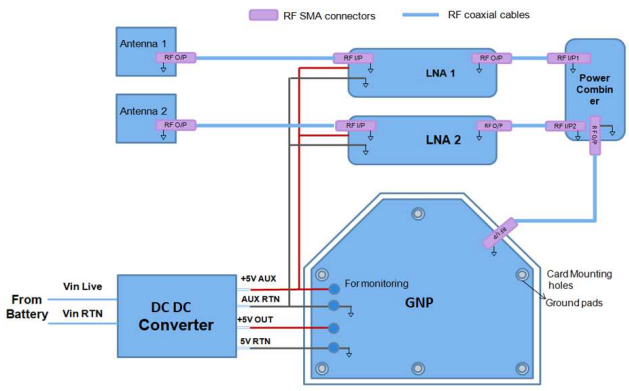

Figure 2. Grounding scheme of GNP.

is arrived at. The salient features of the grounding scheme are the following.

- All the vehicle electrical circuits are not shorted to a single chassis point
- All the vehicle battery returns are connected with a 10K Ohm to chassis
- Due to OR configuration of batteries, Pyro and valve returns will be shorted and it reduces overall isolation
- All the systems are monitored through instrumentation circuits which provides a resistive isolation
- Overall isolation across various systems reduces due to this

Typical telemetry monitoring scheme is shown in Figure-3.

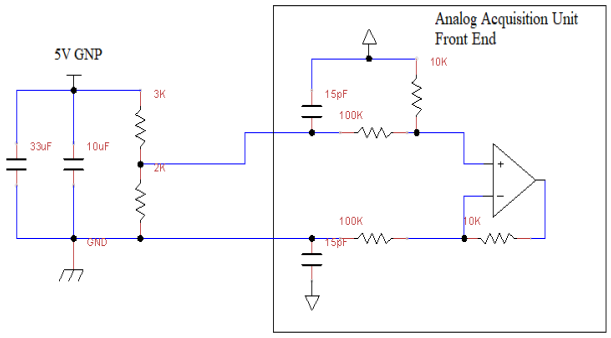

Figure 3. Typical telemetry monitoring scheme in a launch vehicle.

In passive measurements 110KΩ resistance is observed between the monitoring return to instrumentation return when one monitoring is carried out through telemetry. If multiple monitoring from a single power source is taken then it results in the resistance being parallel to each other and hence there would be a reduction in isolation. Voltage between instrumentation return and chassis is not 0V. It varies due to the number of measurements through various systems and the number of chassis referred monitoring. Voltage between instrumentation return and chassis changes when a stage separation occurs or umbilical pull out happens due to disconnection of monitoring circuits in ground checkout or lower stages.

3.2. Test configuration

Considering GNP prime and redundant packages, there are four analog telemetry monitoring – GNP P 5V, GNP R 5V, LNA P 5V and LNA R 5V. Each of these voltages are monitored using a resistor divider network. The monitoring live line has 110KΩ series impedance with respect to instrumentation return. Monitoring returns are connected to vehicle chassis. 3KΩ resistance is simulated between vehicle chassis and instrumentation return and a DC power source is used to simulate the voltage difference between chassis and instrumentation return. Pyro battery is simulated using 36V power supply. Return line of pyro battery is connected to chassis through 1.7KΩ resistor. Pyro battery voltage is monitored through a resistor divider network and monitoring live is connected to instrumentation return through a 110KΩ resistor.
The pyro/valve battery voltage monitoring is also simulated. Since valve battery has 32 such monitoring, the effective resistance values are computed by dividing resistors in individual monitoring circuit by 32. The effective pyro battery voltage divider network consists of 15KΩ/32 and 1KΩ/32 resistances. There is a series resistance of 110KΩ/32 in the monitoring line.

3.3. Tests carried out

The different possible scenarios that can result in chassis induced voltages are considered for deriving the test cases. The major events considered are as follows.

3.3.1. Stage separation and vehicle lift off

During stage separation and vehicle lift off, there is a possibility that the potential difference between vehicle chassis and instrumentation return varies. Maximum expected variation is from +10V to -10V. This change in grounding levels is simulated using DC power source and varying chassis to instrumentation return voltage from -10 V to +10V.

3.3.2. Instruments converter shorting to chassis

Due to sensors housed in engine and separation areas there is a chance that chassis return can short to instruments live and return. This can result in vehicle chassis to instrumentation return voltage variation of ±15V over and above the previous case. Hence this scenario can be simulated by varying instrumentation return to chassis potential +10V to +25V and -10V to -25 assuming 15V converter shorts to chassis.

3.3.3. Pyro or valve battery shorting to chassis

Pyro or valve battery live shorting to chassis is observed many times in different launch vehicle missions. To simulate this, pyro battery live is shorted to chassis as a sudden event through a relay. Shorting is repeated multiple times in short durations for this case. This case is tested in the following different conditions:

a. Pyro battery live line shorted to chassis scenario is simulated for a duration of 20ms.
b. Pyro battery live line shorted to chassis scenario is simulated for a duration of 200ms (Nominal duration of pyro commands).
c. Simulating 5A chassis current –5A chassis current through GNP chassis was simulated by shorting pyro battery live to GNP chassis through an electronic load.

Based on the grounding scheme followed for GNP, the following are extensively evaluated in all the test cases mentioned above.

a. Any occurrence of flight mode to monitor mode transition due to disturbance in flight reset line
b. Power on reset occurrence due to disturbance in power input line
c. Error in MIL STD 1553B communication with Mission Computer (MC)
d. Error in UART communication with Sensor electronics card

Mode of testing and signals monitored

All the tests are carried out in flight mode with MIL STD 1553B messages acquired by Checkout Computer. Sensor electronics card is connected to GNP. During all the tests, the following signal lines are monitored

a. 5V input to GNP
b. Current drawn by GNP
c. Current drawn by DC-DC converter in GNP
d. Flight RESET line
e. MIL STD 1553B waveforms
f. GNP 2V analog monitoring

3.4. Test Results

The different points related to the performance observed are:

a. During all the test cases, disturbances are observed in 5V input to GNP and current drawn by GNP. These disturbances have settled within 10 microseconds from the transient instance. A plot of the disturbances is shown in Figure-4.
b. Similar disturbance of the order of 10 microseconds is observed in flight RESET line also. However, GNP accepts only a pulse of minimum 1ms width as a valid RESET signal. Hence minor glitches in RESET line are of no concern. A plot of the disturbances is shown in Figure-5.
c. The amplitude of the above disturbance is lower with analog T/M monitoring removed.
d. No error is observed in UART communication with sensor electronics card.

e. MIL STD 1553B waveforms are clean.
f. Presence of instrumentation return to chassis voltage results in mean shift in LNA and GNP 5V analog T/M monitoring.

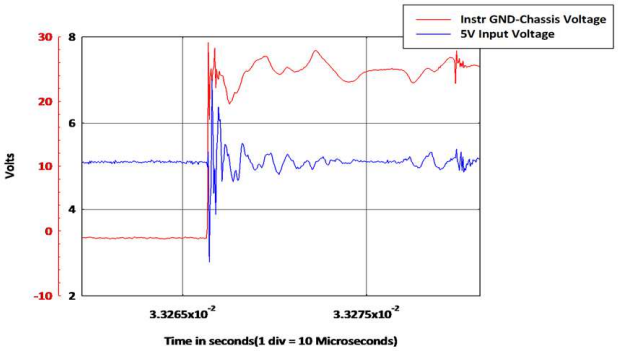

Figure 4. Oscillations in 5V input voltage to GNP when a 25V connected between instrumentation return and chassis.

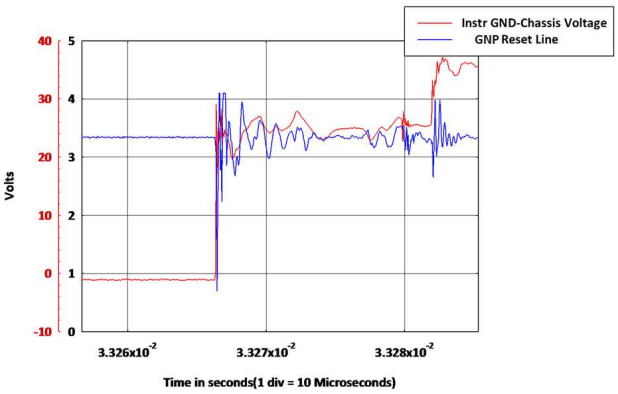

Figure 5. Oscillations in GNP flight RESET line when a 25V connected between instrumentation return and chassis.

4. Design Improvements for Robust Performance

As per the experimental studies, there are no considerable effects when a voltage is applied to the chassis. The transient oscillations seen in 5V supply line and RESET line are having a maximum of 10µs duration which is not having any functional impact. A shift is seen in analog monitoring outputs when a voltage is applied to chassis w.r.t instrumentation return. This is also not having any functional impact. However, in order to make the design more robust to variations in chassis voltage, following design improvements are carried out

a. Presently in GNP, the monitor mode to flight mode transition and vice versa will happen when a RESET pulse is applied on the flight RESET line. The width of the pulse should be more than 1ms for the action to take place and there is no upper limit. In order to have a wider margin w.r.t the transient oscillations seen in RESET line, the width of the reset pulse is increased from 1ms to 1.5ms. Also, an upper limit and lower limit is put for the RESET signal making the limit to 1.5±0.25ms.
b. A variation is seen in the GNP analog voltage monitoring by launch vehicle instrumentation circuit when a voltage is applied to the chassis. This happens since the return and all the voltages in GNP are lifted equally when a voltage is applied to the chassis. The chassis voltage is having no impact for any functions which are fully contained inside GNP. However, if we monitor a voltage in GNP w.r.t any other external reference point, there is bound to have a variation. Presently in GNP all other external interfaces like supply, UART and 1553B are isolated interfaces. The only non-isolated interface is analog monitoring. A small new package is designed for isolated monitoring of 5V in GNP. The shift in analog monitoring with chassis voltage change is vanished when the analog monitoring is routed through this new package.

5. Conclusion

Grounding scheme of a GNSS receiver embedded navigation processor is studied in this paper. A common ground is given for both the RF circuit and digital circuit. Since shorting of ground to chassis is mandatory for an RF circuit, the common ground of the GNP is shorted to the package chassis and thus to launch vehicle chassis. Different experiments are conducted to simulate various chassis voltage conditions seen in a launch vehicle. Different conditions like inadvertent chassis voltage during stage separation, instruments converter shorting to chassis, pyro or valve battery live shorting to chassis and pyro or valve battery live shorting to return are simulated. All signals in the package which may get affected due to this short are monitored during the test. The test results are critically analyzed and two design changes are incorporated in GNP to make it more robust to chassis voltage change.

6. Acknowledgements

The authors thank Dr. Sam Dayala Dev D, Director IISU and Shri. K S Mani, Associate Director, IISU for their whole hearted support and encouragement for carrying out this work. We acknowledge the task team constituted for studying GNP grounding scheme for proposing different test cases.

7. References

1. Elliott D. Kaplan, Christopher J. Hegarty, “Understanding GPS Principles and Applications” 2nd ed, Artech House.

2. Interface Control Document of GPS: ICD-GPS-200C.

3. Indian Regional Navigation Satellite System, Signal in Space ICD for Standard Positioning Service, Version 1.0.